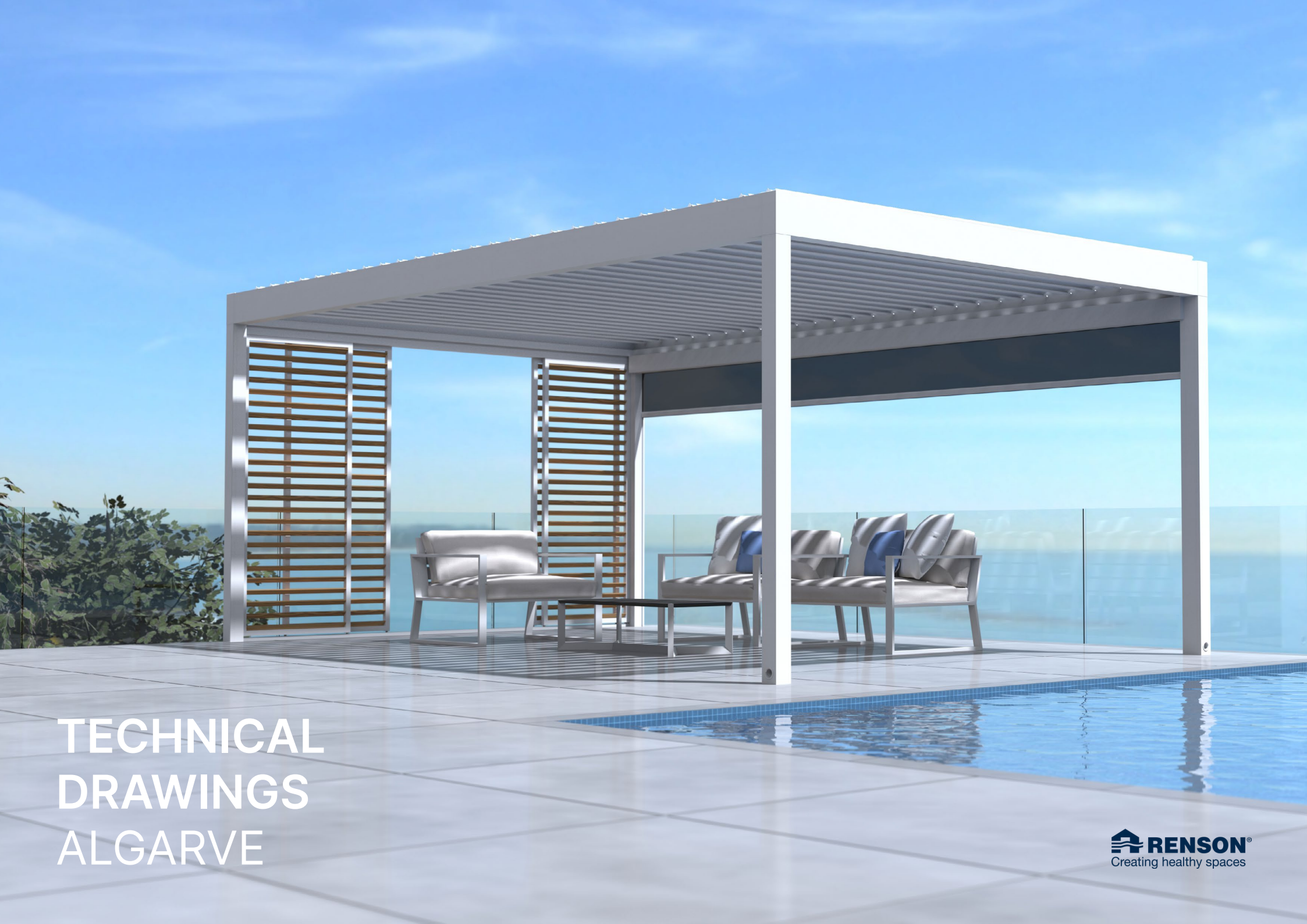

TECHNICAL DRAWINGS
ALGARVE

RENSON®
Creating healthy spaces

ABOUT THIS DOCUMENT

This interactive PDF offers all the Algarve technical drawings. On the next page you will find the index page with an overview of all available drawings. Click on the titles and you will be redirected to the correct page. When going through the drawings you'll find on the right bottom the Renson logo which leads you back to the index page. Next to that, each drawing has a link to download the PDF or DWG file.

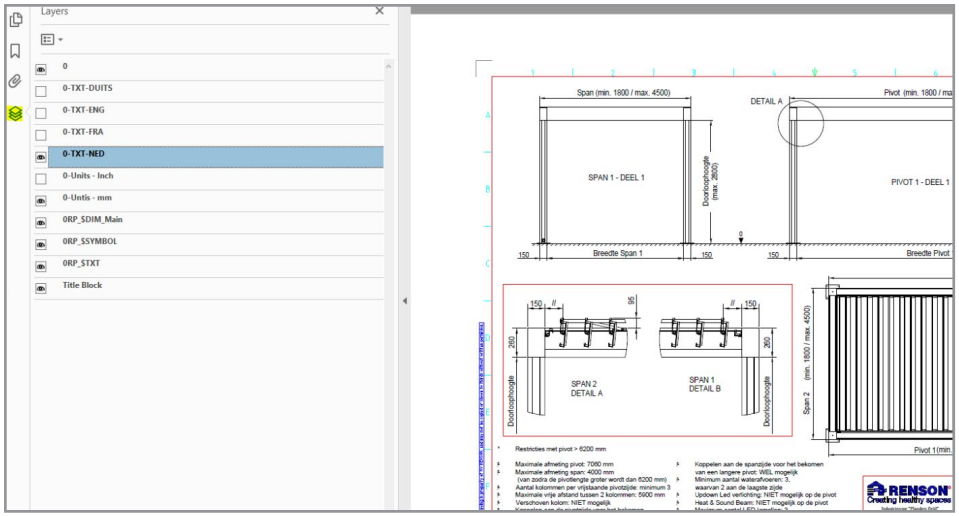

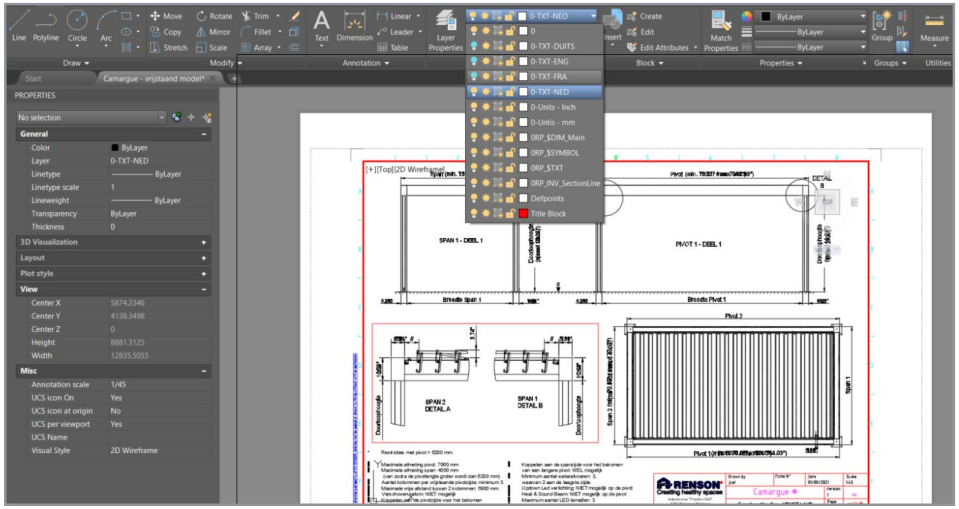

HOW TO TURN ON/OFF LANGUAGES AND DIMENSION LAYERS

- in PDF viewer

When opening the pdf document, notice several layers are standing over each other. Go to the left side of the pdf and click on the tab called 'layers'. A menu will appear with the different language and dimension layers. Turn layers on and off by clicking on the eye-icon next to the name of the layer.

- in Autocad

Go to the 'layout' tab at the topbar. A menu will appear with the different layers. Turn layers on and off by clicking on the lightbulbs next to the name of the layer.

RENSON®
Creating healthy spaces

INDEX

CONSTRUCTION

TYPE OF PERGOLA
- Freestanding
- Freestanding intermediate column
- Façade mounting pivot
- Façade mounting span
- Single with intermediate beam
- Wall fixation

MOUNTING BASES
- Visible mounting base
- Visible mounting base - corner
- Invisible mounting base
- Visible mounting base reinforced
- Visible mounting base reinforced - corner
- Invisible mounting base reinforced

WATER DRAINAGE

ACCESSORIES

FIXSCREEN
- Stand alone-fixscreen at pivot side
- Stand alone-fixscreen at span side
- Wall at span side - fixscreen at pivot side
- Wall at pivot side - fixscreen at span side

OUTDOOR LOGGIA
- Fixed panels
- 2 sliding panels
- 4 sliding panels

GLASS SLIDING PANELS
- 3 tracks
- 4 tracks
- 5 tracks
- Fixation at wall
- 3 tracks with inclination rail
- Inclination rails
- Double-sided handle
- Single-sided handle

LINIUS WALL
- Linius wall - single sided
- Linius wall - double sided
- Linius wall - double sided as railing

CURTAIN

Algarve - FREESTANDING

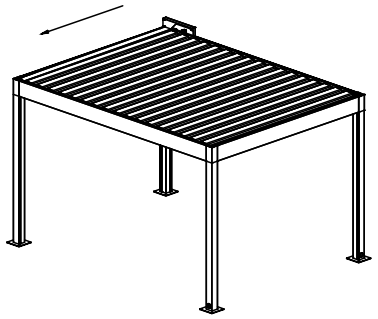

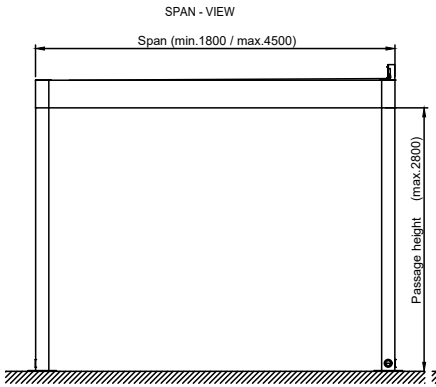

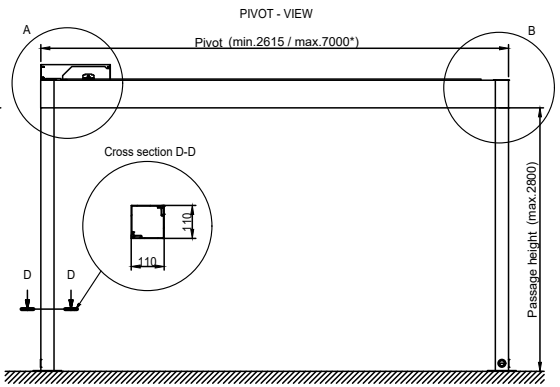

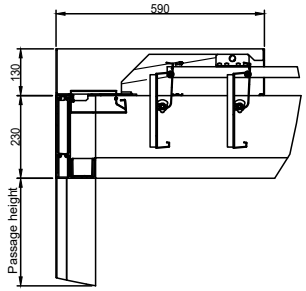

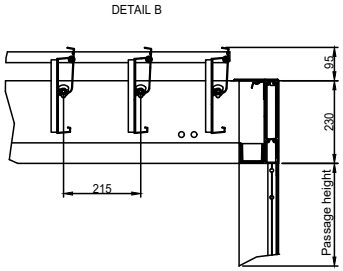

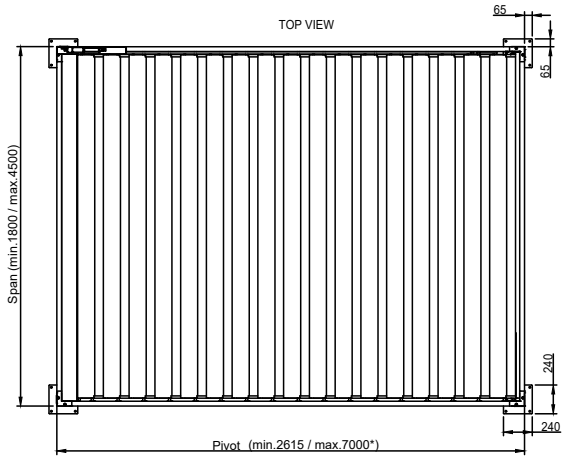

*Restrictions with pivot > 6055mm (see technical product sheet)

- Maximum pivot dimension: 7000 mm
- Maximum span dimension: 4000 mm (once pivot length is greater than 6055 mm)
- Number of columns per free-standing pivot side: minimum three.
- Maximum free space between two columns: 5835 mm
- Shifted column: NOT possible
- Minimum number of water drainage points: three, of which two on the lowest side
- Beam Heat & Sound: NOT possible on the pivot
- Maximum number of Led blades: 3
- Maximum number of glass blades: 5
- Maximum number of Lineo Fix blades 3

This drawing is property of NV RENSON, and may not be copied or shown to thirds without written permision.

RENSON®
Creating healthy spaces
Industriezone "Flanders field"
8790 Waregem (Belgium)
Tel. 056/62.71.11 Fax. 056/60.28.51

Drawn by		Date	Scale
jcat		01/09/2021	1/50
Algarve®		Version 1	Format A4
Construction method: FREESTANDING		Page 1/1	

Download this drawing DWG

Download this drawing PDF

RENSON®
Creating healthy spaces

Algarve - FREESTANDING INTERMEDIATE COLUMN

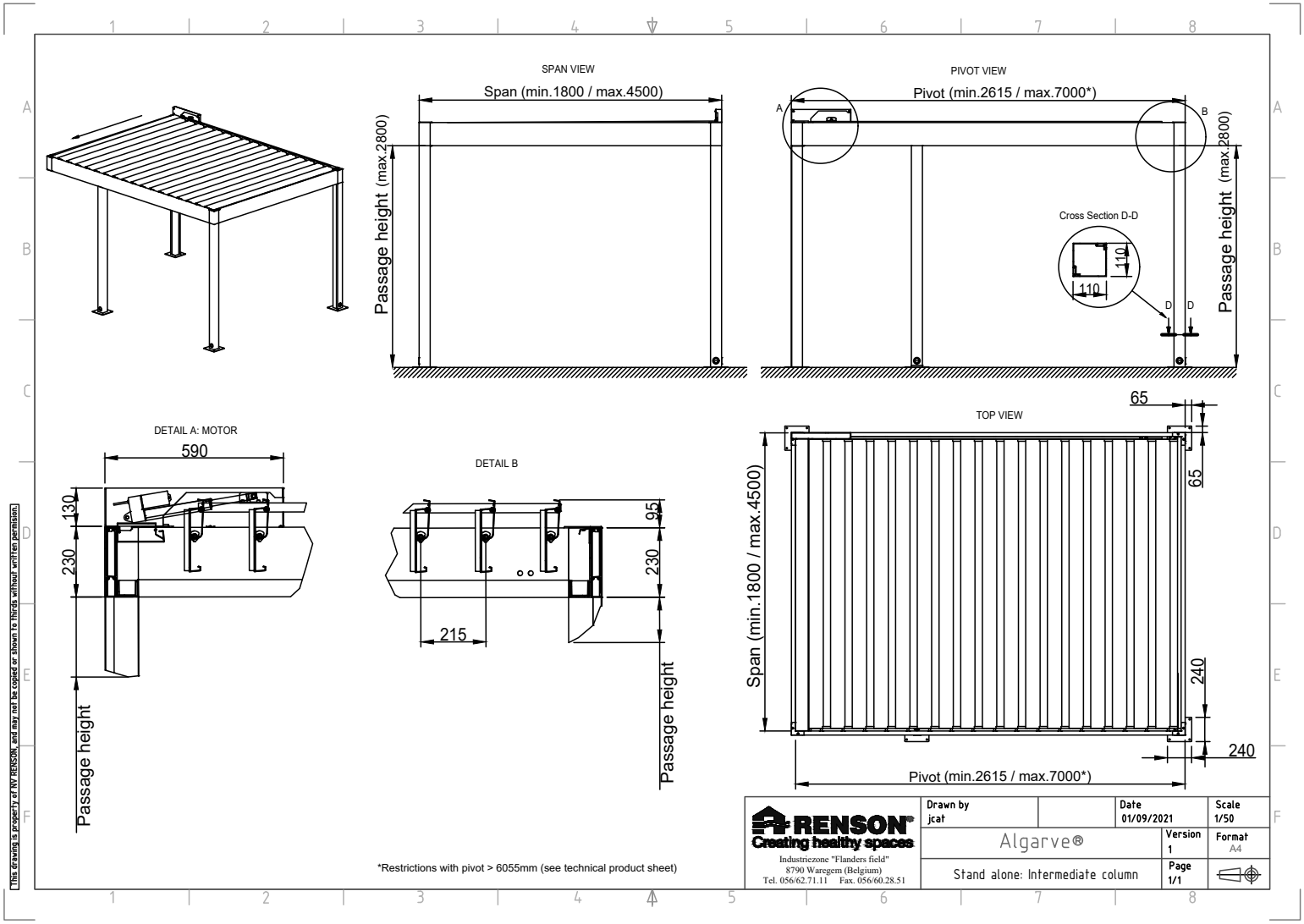

Download this drawing DWG

Download this drawing PDF

RENSON®
Creating healthy spaces

Algarve - FAÇADE MOUNTING PIVOT

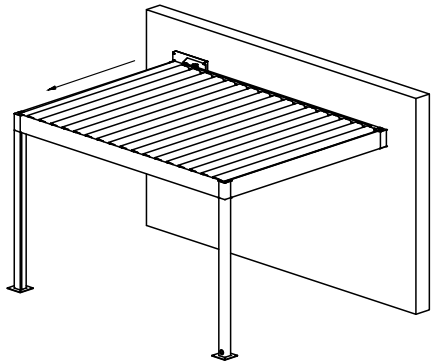

SPAN VIEW

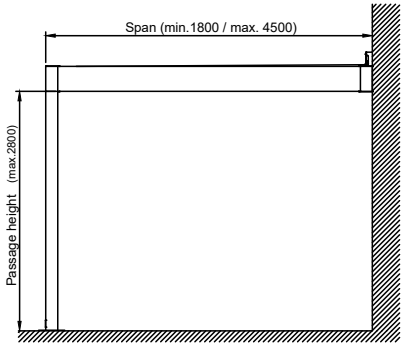

PIVOT VIEW

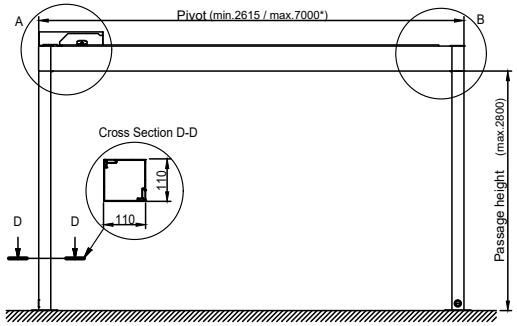

TOP VIEW

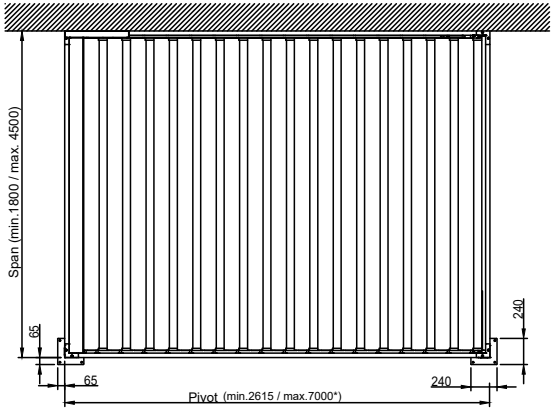

DETAIL A: MOTOR

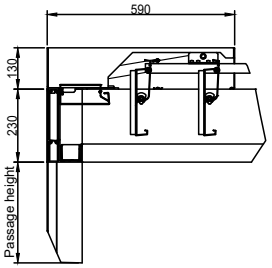

DETAIL B

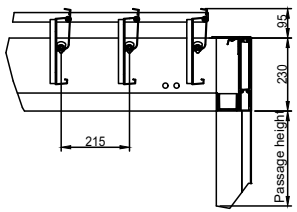

*Restrictions with pivot > 6055mm (see technical product sheet)

This drawing is property of NV RENSON, and may not be copied or shown to thirds without written permision.

RENSON®
Creating healthy spaces
Industriezone "Flanders field"
8790 Waregem (Belgium)
Tel. 056/62.71.11 Fax. 056/60.28.51

Drawn by jcat		Date 01/09/2021	Scale 1/50
Algarve®		Version 1	Format A4
FACADE MOUNTING PIVOT		Page 1/1	

Download this drawing DWG

Download this drawing PDF

RENSON®
Creating healthy spaces

Algarve - FAÇADE MOUNTING SPAN

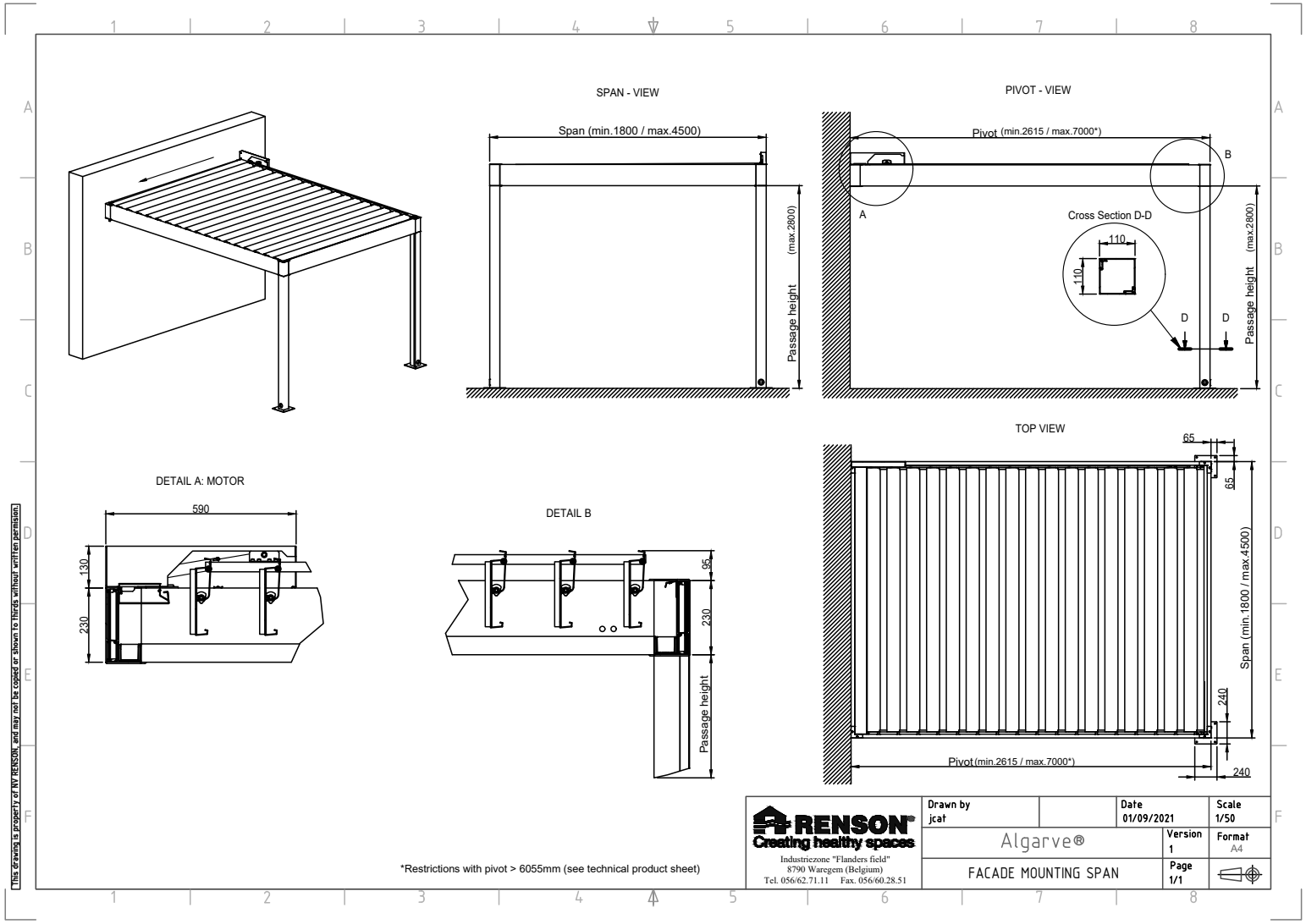

Download this drawing DWG

Download this drawing PDF

RENSON®
Creating healthy spaces

Algarve - SINGLE WITH INTERMEDIATE BEAM

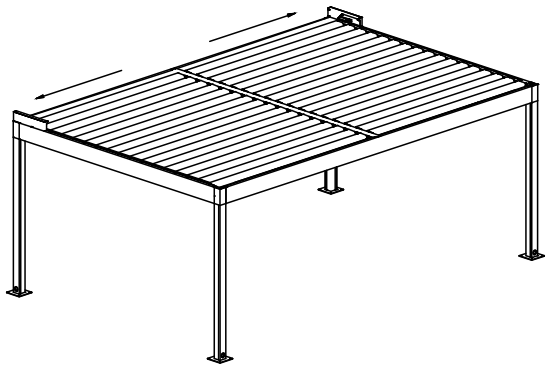

SPAN - VIEW

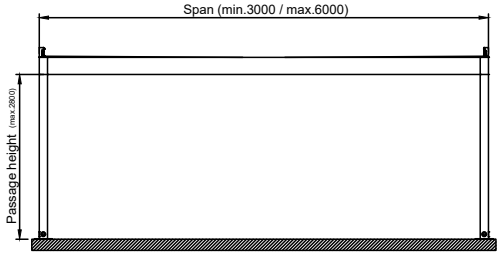

PIVOT - VIEW

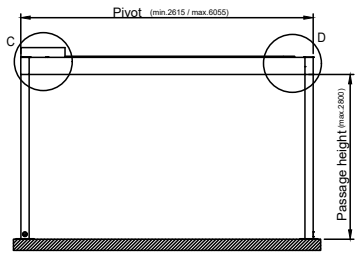

TOP VIEW

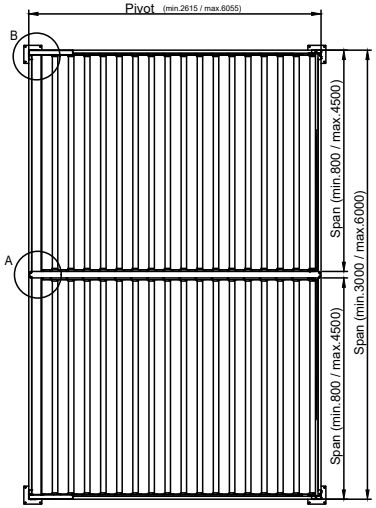

DETAIL B: DRAINAGE IN CORNER

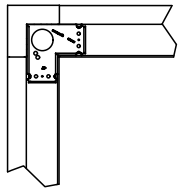

DETAIL C: MOTOR

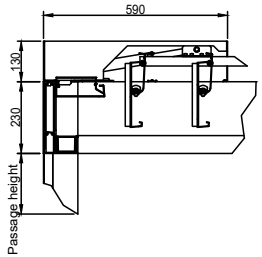

DETAIL D

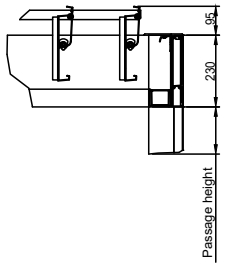

DETAIL A: DRAINAGE

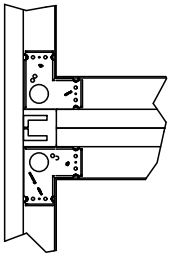

This drawing is property of NV RENSON, and may not be copied or shown to thirds without written permision.

RENSON®
Creating healthy spaces
Industriezone "Flanders field"
8790 Waregem (Belgium)
Tel. 056/62.71.11 Fax. 056/60.28.51

Drawn by jcat		Date 01/09/2021	Scale 1/80
Algarve®		Version 1	Format A4
SINGLE WITH INTERMEDIATE BEAM		Page 1/1	

Download this drawing DWG

Download this drawing PDF

RENSON®
Creating healthy spaces

Algarve - WALL FIXATION

Position of the mounting holes in the wall

SPAN 1

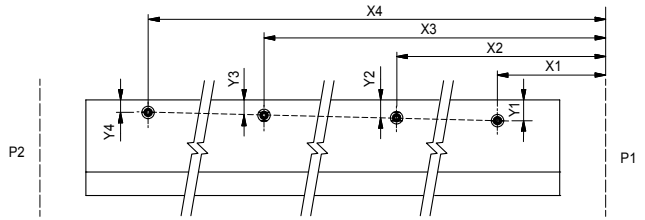

SPAN 2

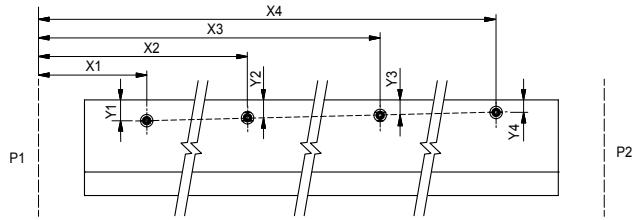

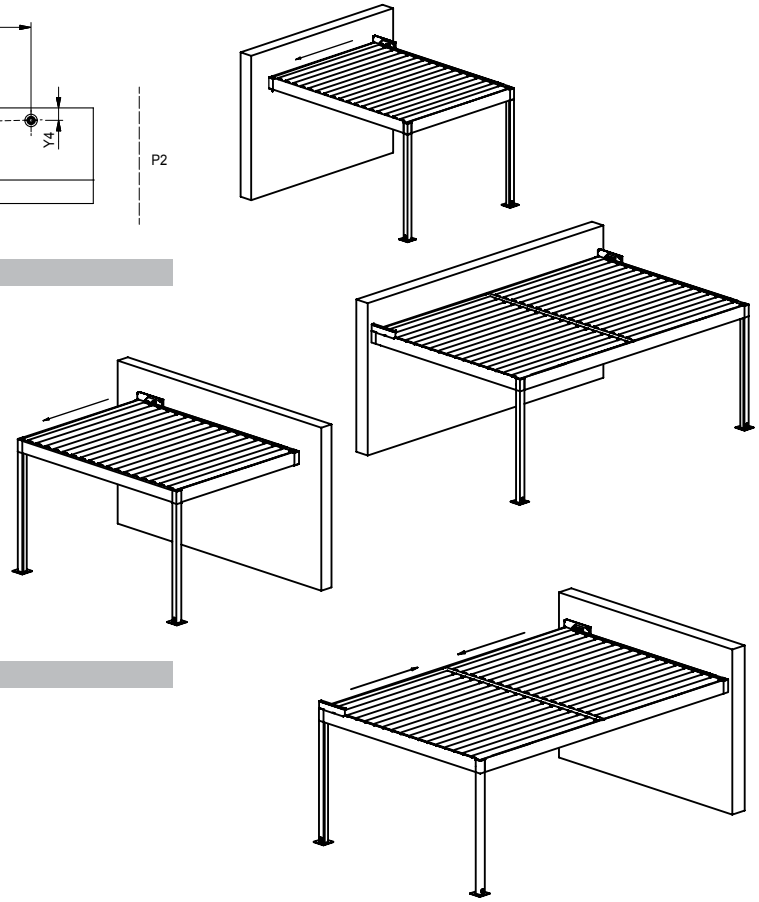

PIVOT 1

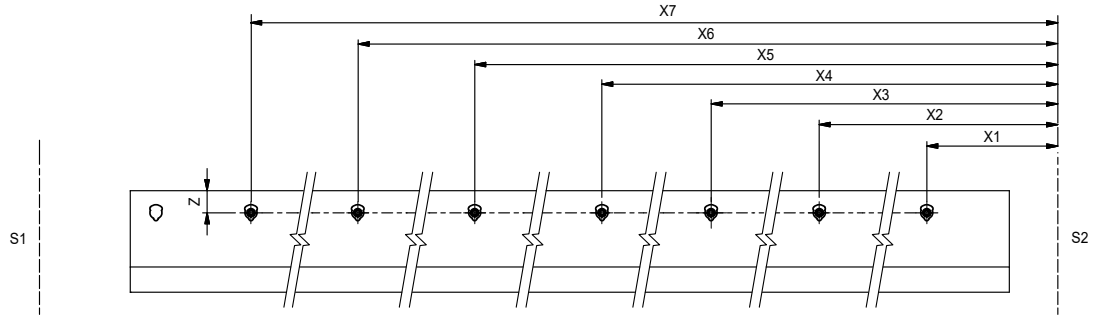

PIVOT 2

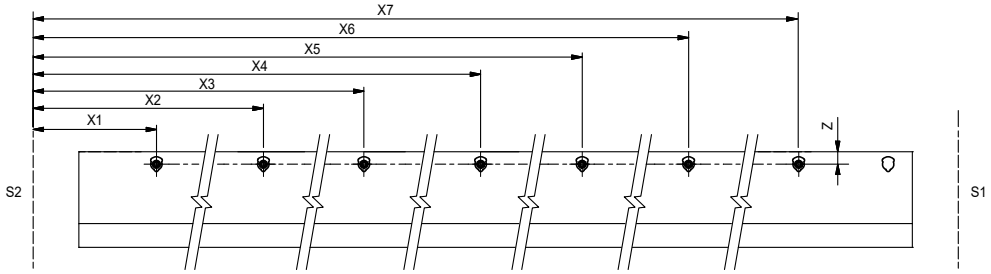

Download calculation tool

RENSON®
Creating healthy spaces

Algarve - VISIBLE MOUNTING BASE

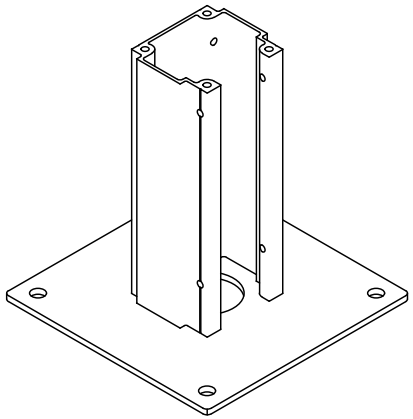

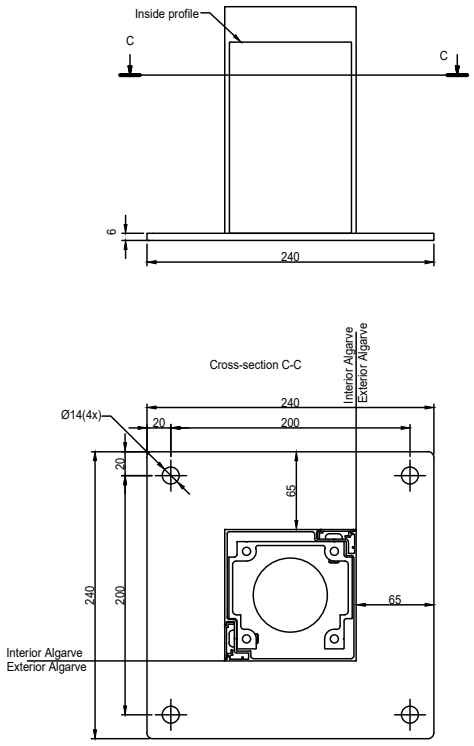

This drawing is property of NV RENSON, and may not be copied or shown to thirds without written permission.

RENSON®
Creating healthy spaces
Industriezone "Flanders field"
8790 Waregem (Belgium)
Tel. 056/62.71.11 Fax. 056/60.28.51

Drawn by	Fiche N°	Date	Scale
jcat		01/09/2021	1:5
Algarve ®		Version 1	A4
Visible mounting base		Page 1/1	

Download this drawing DWG

Download this drawing PDF

RENSON®
Creating healthy spaces

Algarve - VISIBLE MOUNTING BASE-CORNER

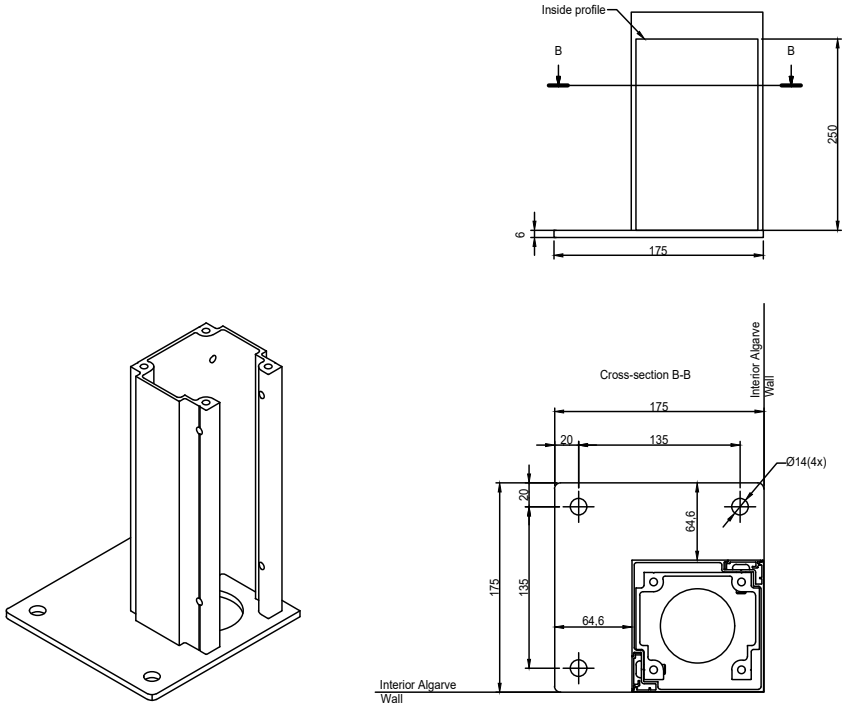

This drawing is property of NV RENSON, and may not be copied or shown to thirds without written permision.

RENSON®
Creating healthy spaces
Industriezone "Flanders field"
8790 Waregem (Belgium)
Tel. 056/62.71.11 Fax. 056/60.28.51

Drawn by	Fiche N°	Date	Scale
jcat		01/09/2021	1:5
Algarve ®		Version 1	A4
Visible mounting base - corner		Page 1/1	

Download this drawing DWG

Download this drawing PDF

RENSON®
Creating healthy spaces

Algarve - INVISIBLE MOUNTING BASE

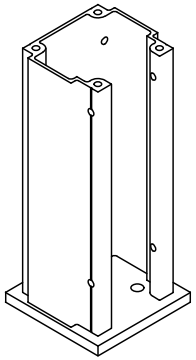

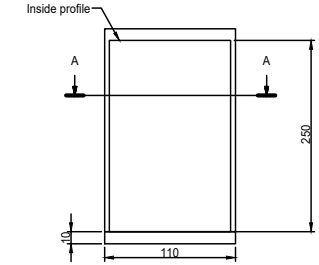

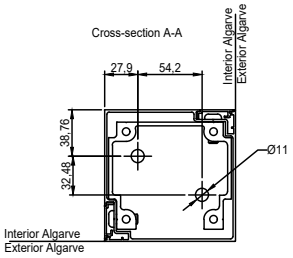

This drawing is property of NV RENSON, and may not be copied or shown to thirds without written permision.

RENSON®
Creating healthy spaces
Industriezone "Flanders field"
8790 Waregem (Belgium)
Tel. 056/62.71.11 Fax. 056/60.28.51

Drawn by	Fiche N°	Date	Scale
jcat		01/09/2021	1:5
Algarve ®		Version 1	A4
Invisible mounting base		Page 1/1	

Download this drawing DWG

Download this drawing PDF

RENSON®
Creating healthy spaces

Algarve - VISIBLE MOUNTING BASE REINFORCED

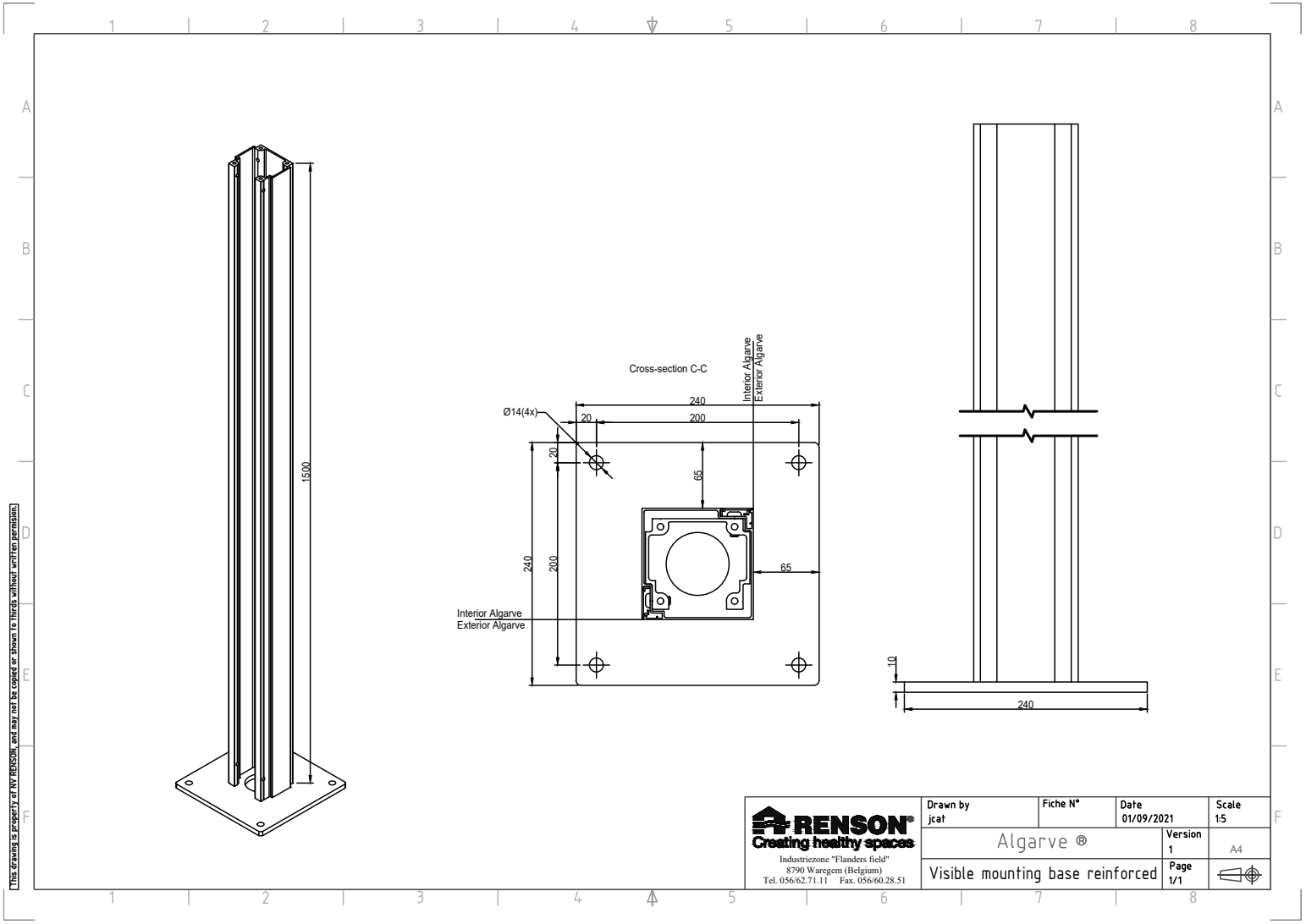

Download this drawing DWG

Download this drawing PDF

RENSON®
Creating healthy spaces

Algarve - VISIBLE MOUNTING BASE REINFORCED - CORNER

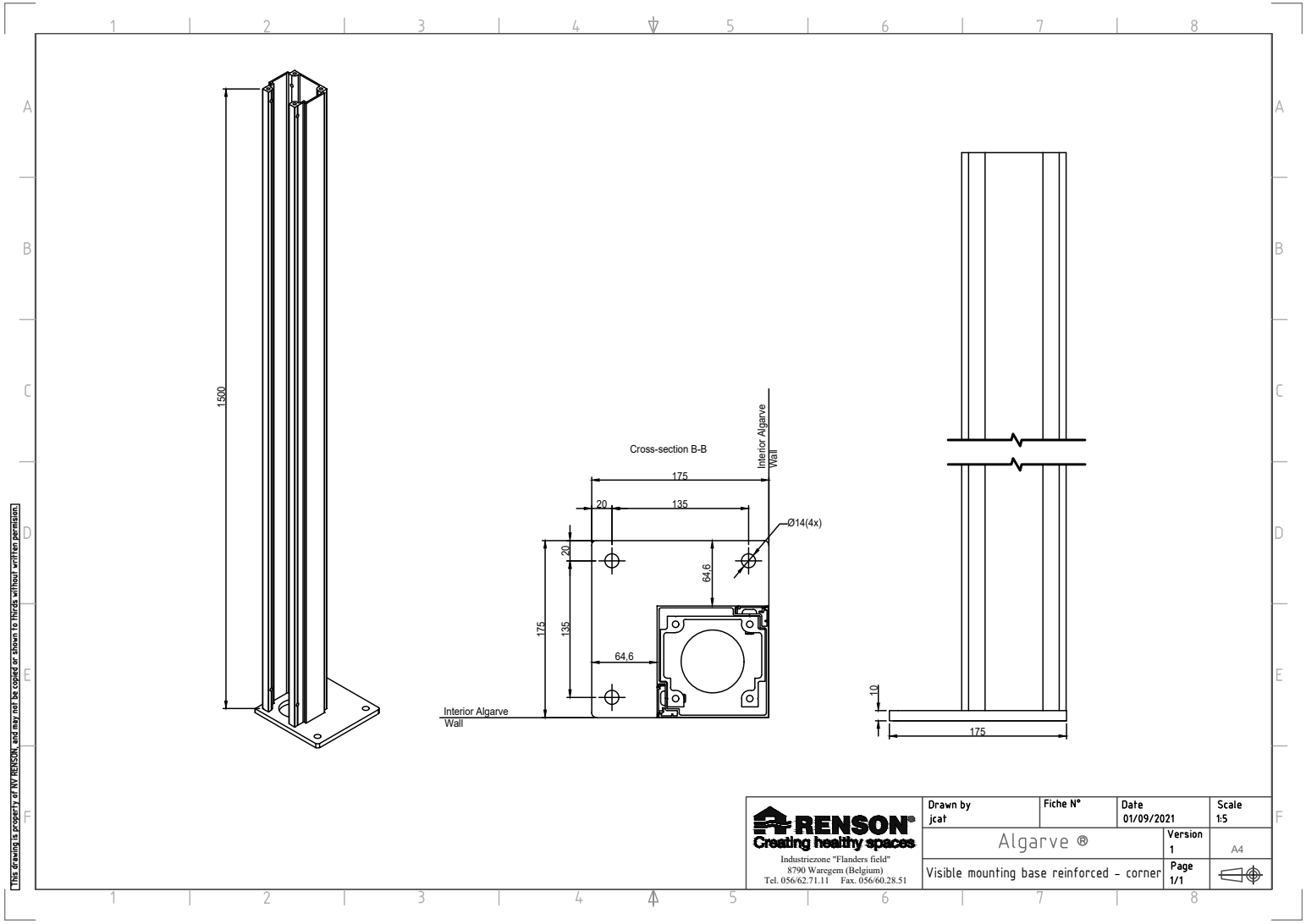

Download this drawing DWG

Download this drawing PDF

RENSON®
Creating healthy spaces

Algarve - INVISIBLE MOUNTING BASE REINFORCED

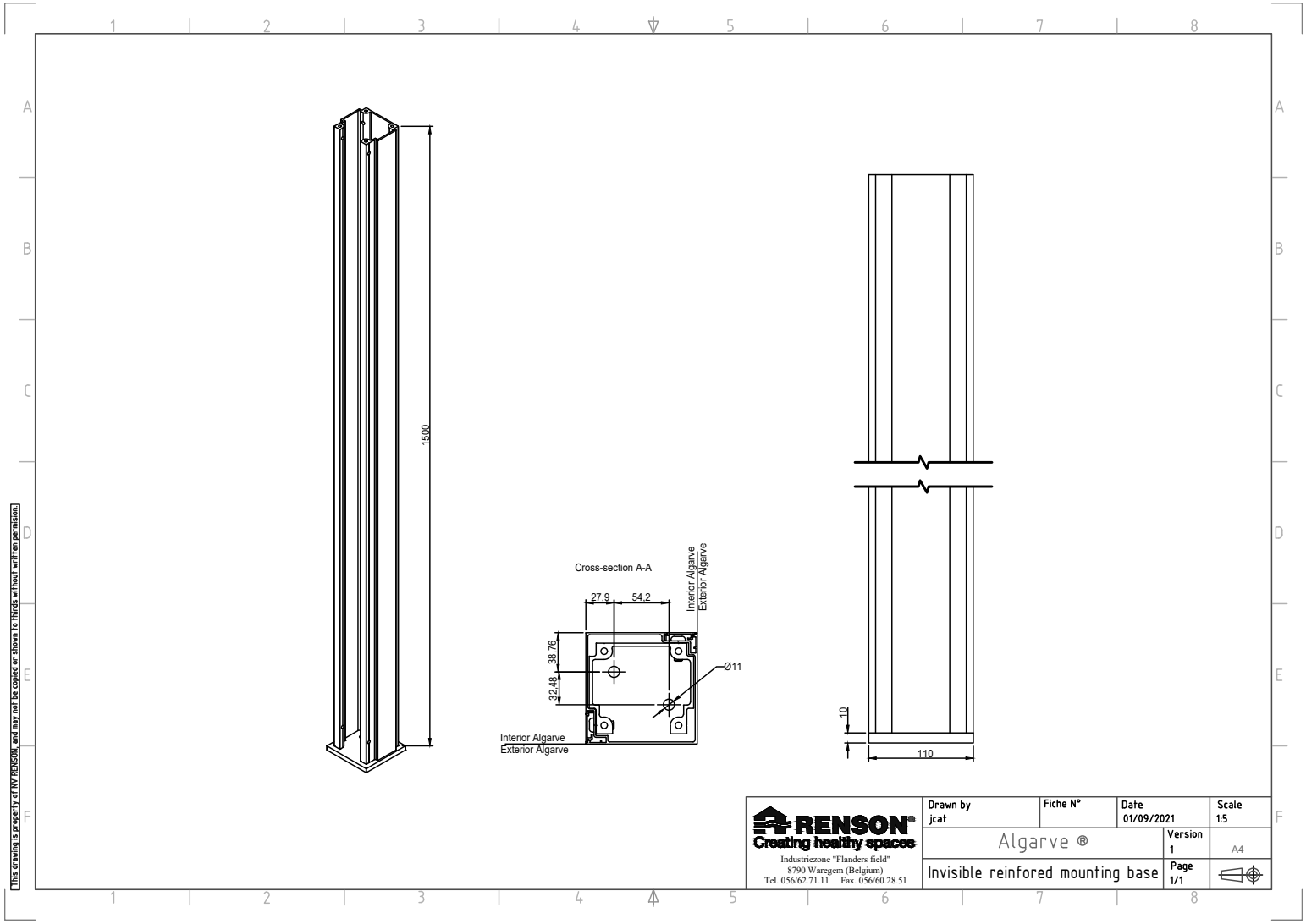

Download this drawing DWG

Download this drawing PDF

RENSON®
Creating healthy spaces

Algarve - WATER DRAINAGE

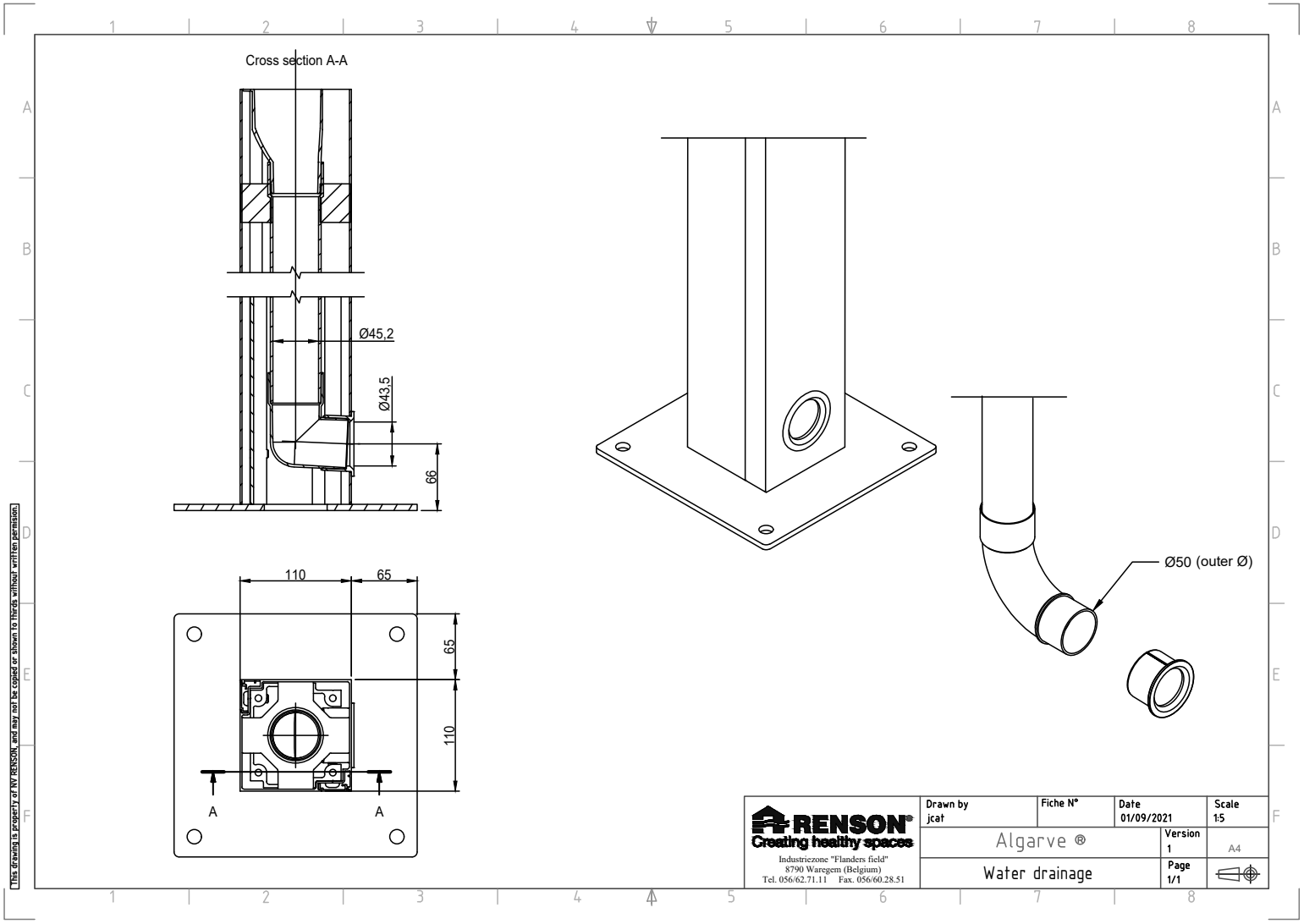

Download this drawing DWG

Download this drawing PDF

RENSON®
Creating healthy spaces

Algarve - STAND ALONE - FIXSCREEN AT PIVOT SIDE

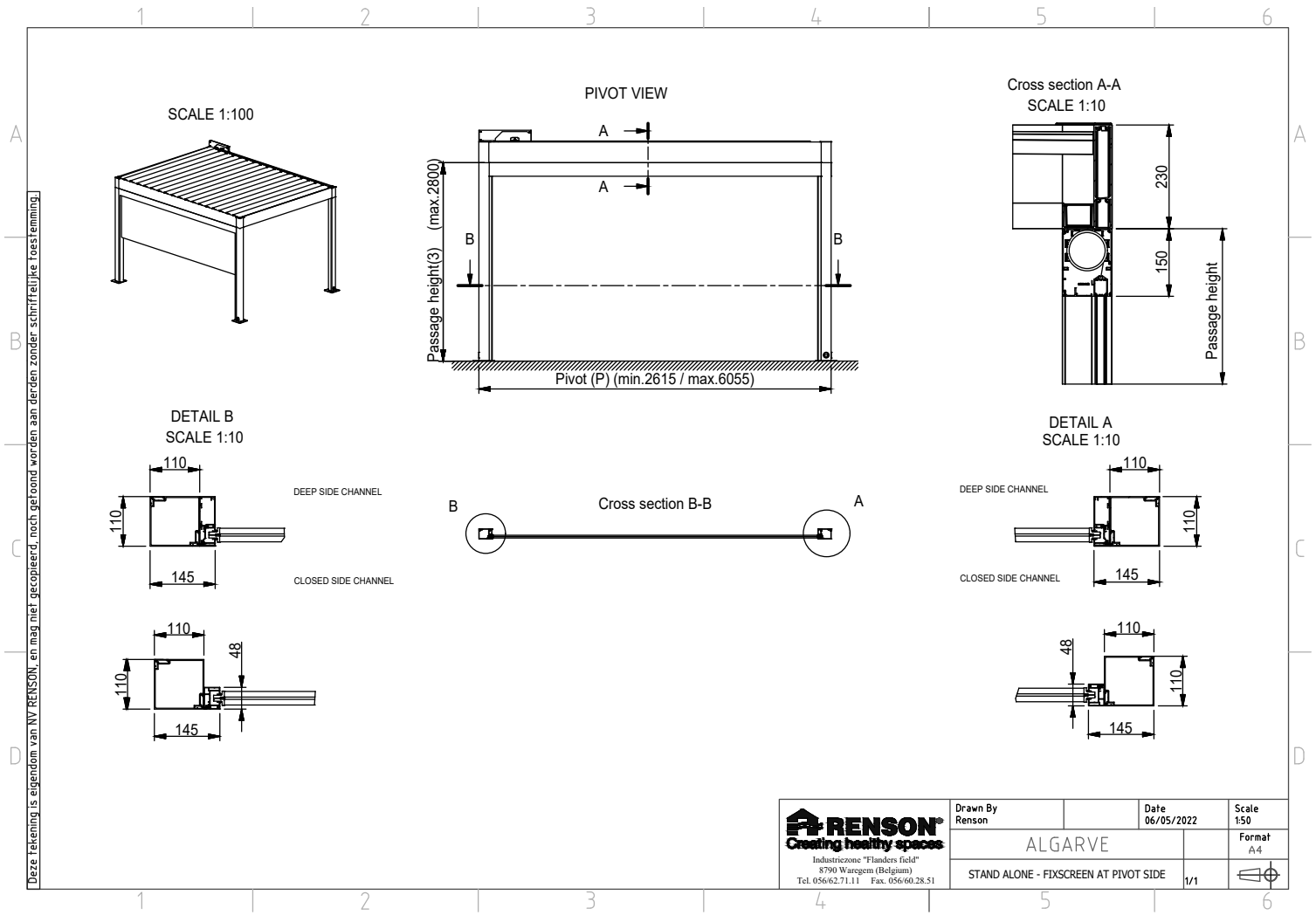

Download this drawing DWG

Download this drawing PDF

RENSON®
Creating healthy spaces

Algarve - STAND ALONE - FIXSCREEN AT SPAN SIDE

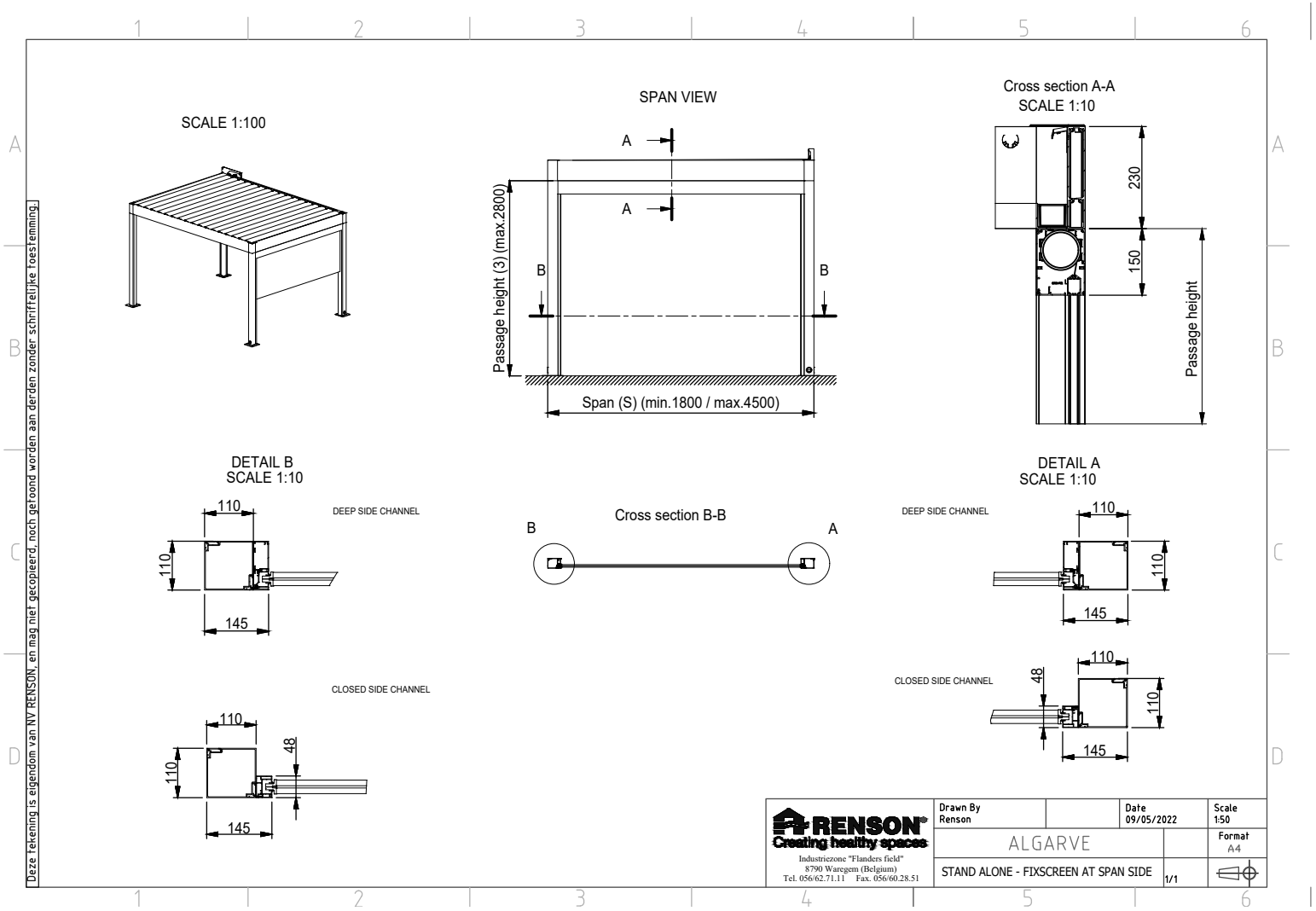

Download this drawing DWG

Download this drawing PDF

RENSON®
Creating healthy spaces

Algarve - WALL AT SPAN SIDE - FIXSCREEN AT PIVOT SIDE

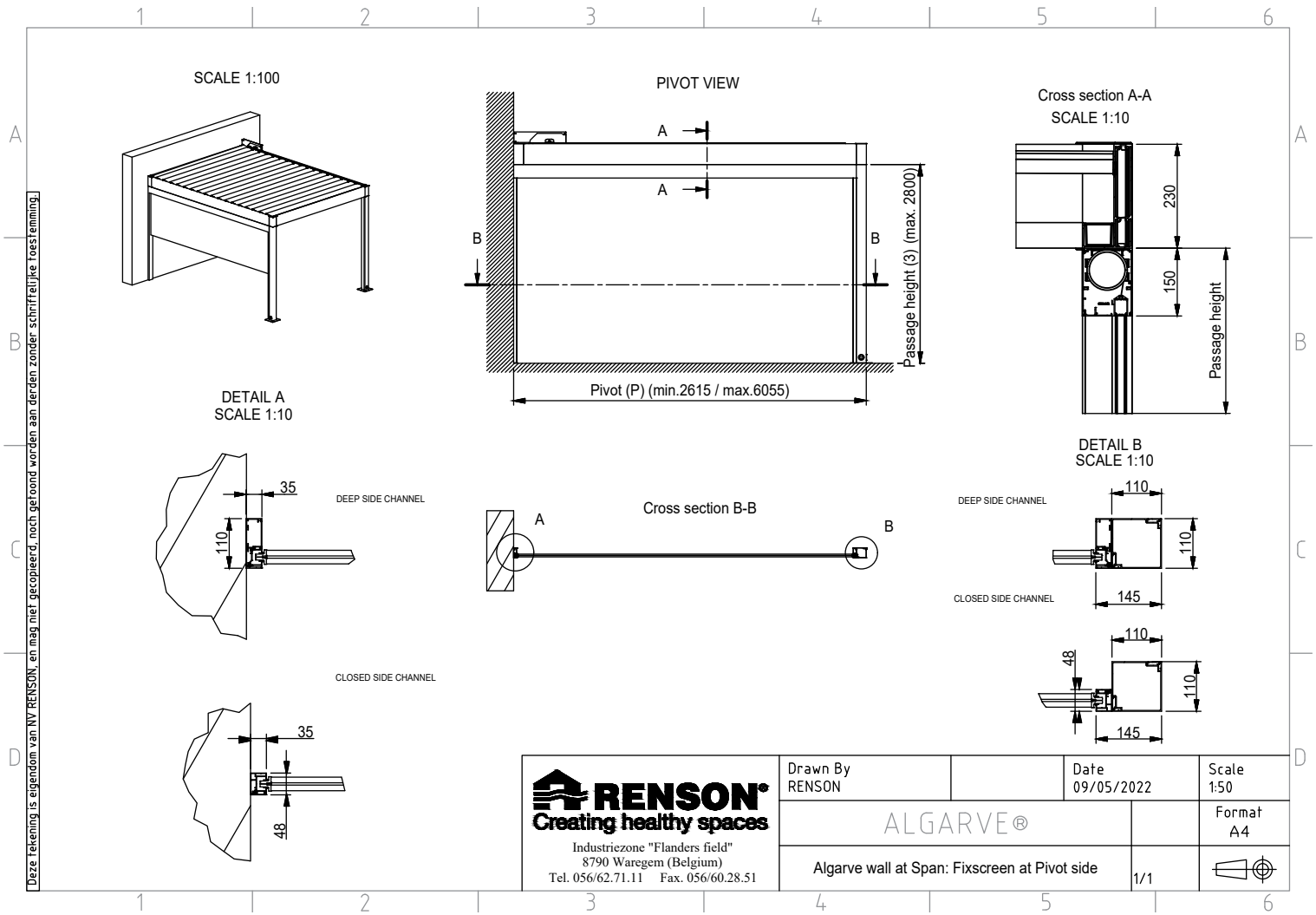

Download this drawing DWG

Download this drawing PDF

RENSON®
Creating healthy spaces

Algarve - WALL AT PIVOT SIDE - FIXSCREEN AT SPAN SIDE

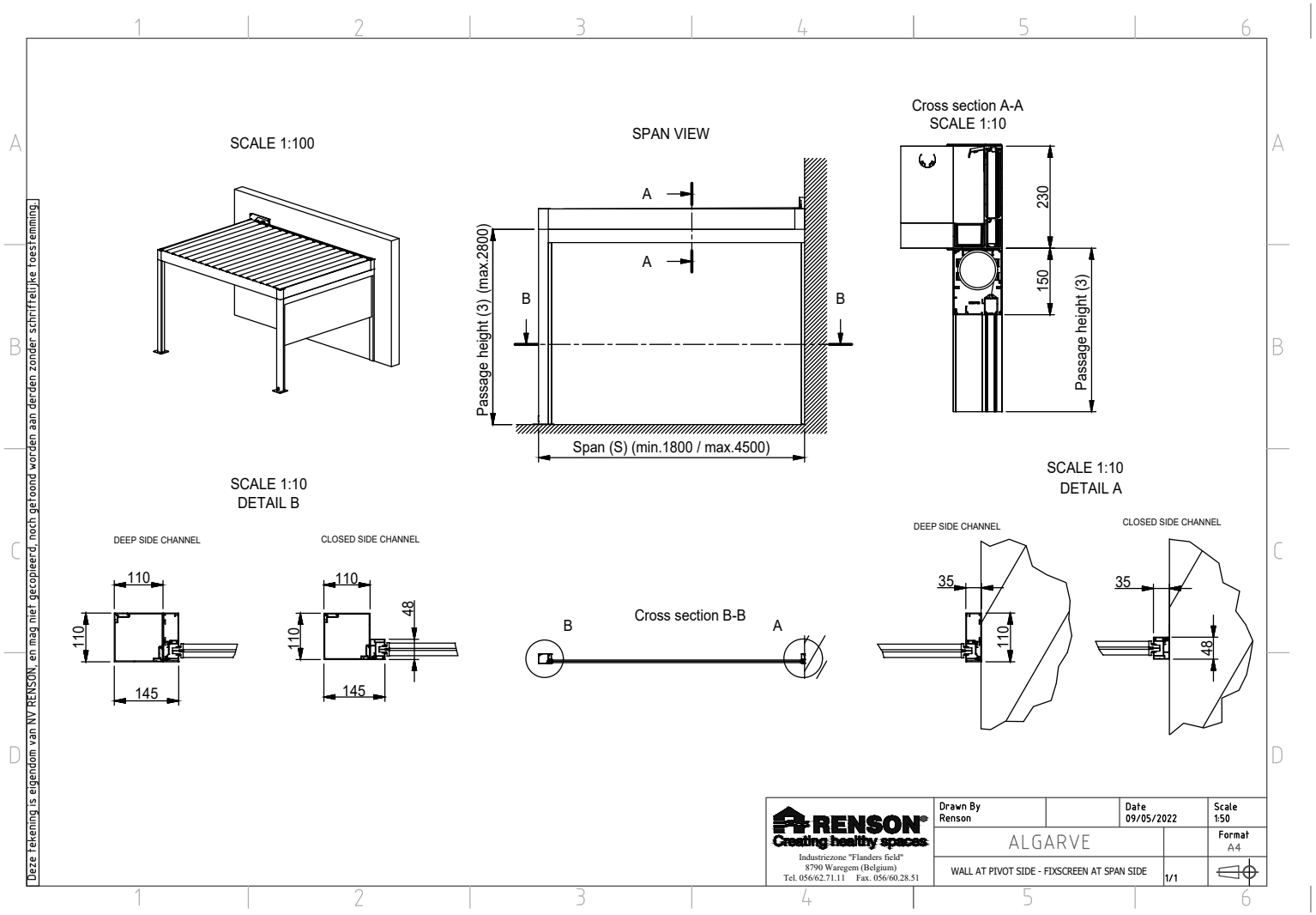

Download this drawing DWG

Download this drawing PDF

RENSON®
Creating healthy spaces

Algarve - OUTDOOR LOGGIA - FIXED PANELS

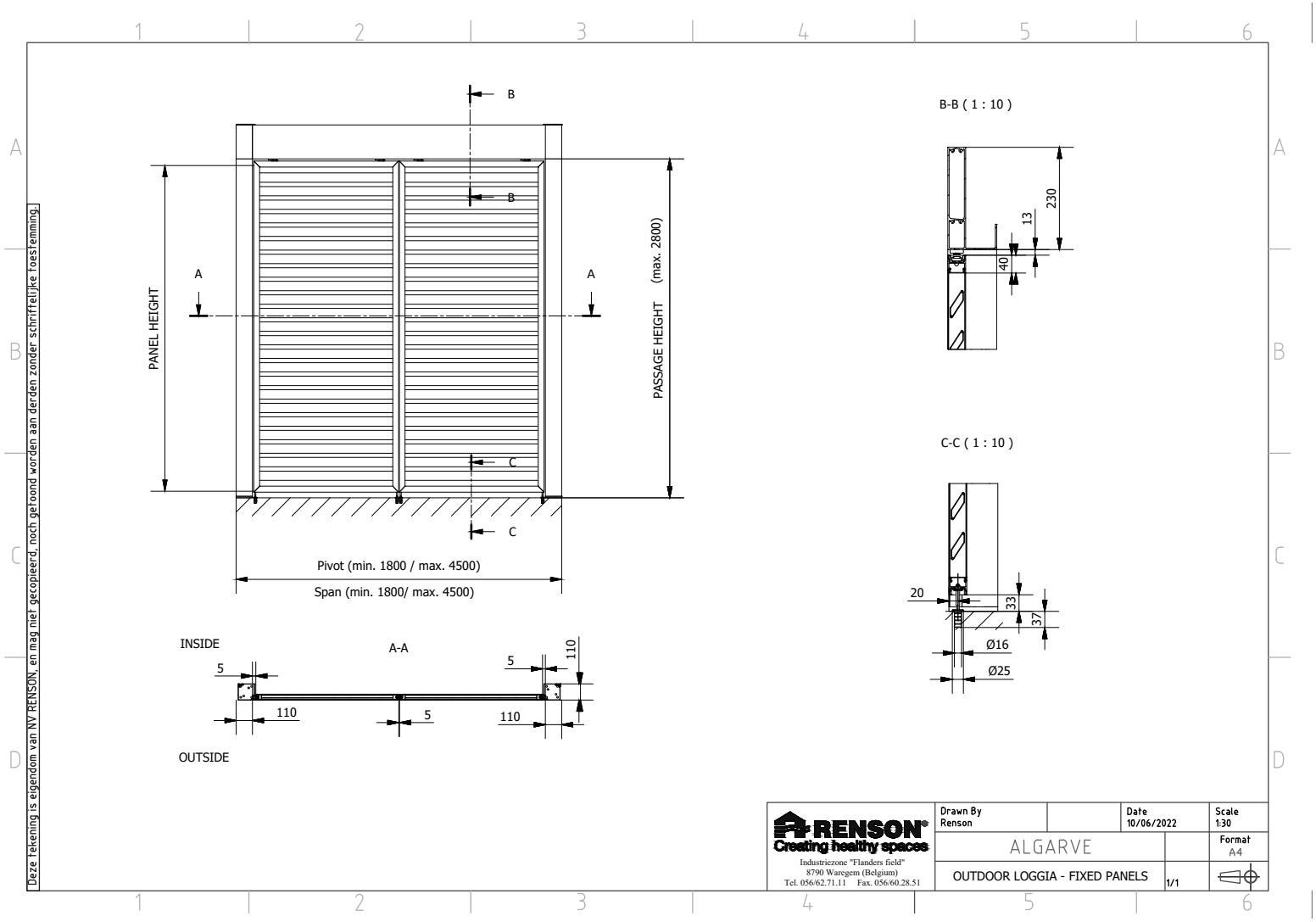

Download this drawing DWG

Download this drawing PDF

RENSON®
Creating healthy spaces

Algarve - OUTDOOR LOGGIA - 2 SLIDING PANELS

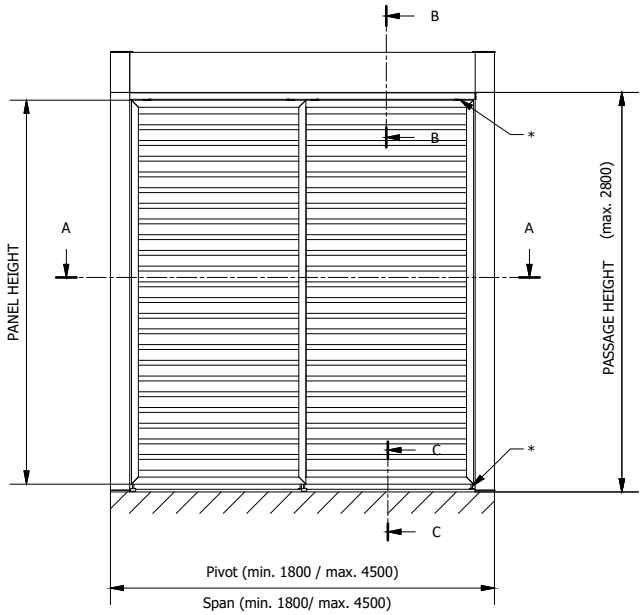

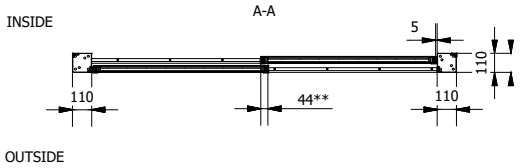

B-B (1 : 10)

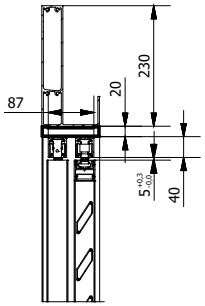

C-C (1 : 10)

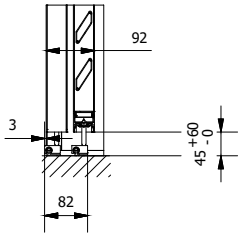

* See "detail rail" drawing

** The overlap at the Loggia Canvas is equal to 68 mm / 2.68 inches.

Deze tekening is eigendom van NV RENSON, en mag niet gecopieerd, noch getoond worden aan derden zonder schriftelijke toestemming.

RENSON® Creating healthy spaces
Industriezone "Flanders field"
8790 Waregem (Belgium)
Tel. 056/62.71.11 Fax. 056/60.28.51

Drawn By	Date	Scale
Renson	10/06/2022	1:30

ALGARVE

Format A4

OUTDOOR LOGGIA SLIDING PANELS - 2 RAILS - 2 PANELS

1/1

Download this drawing DWG

Download this drawing PDF

RENSON® Creating healthy spaces

Algarve - OUTDOOR LOGGIA - 4 SLIDING PANELS

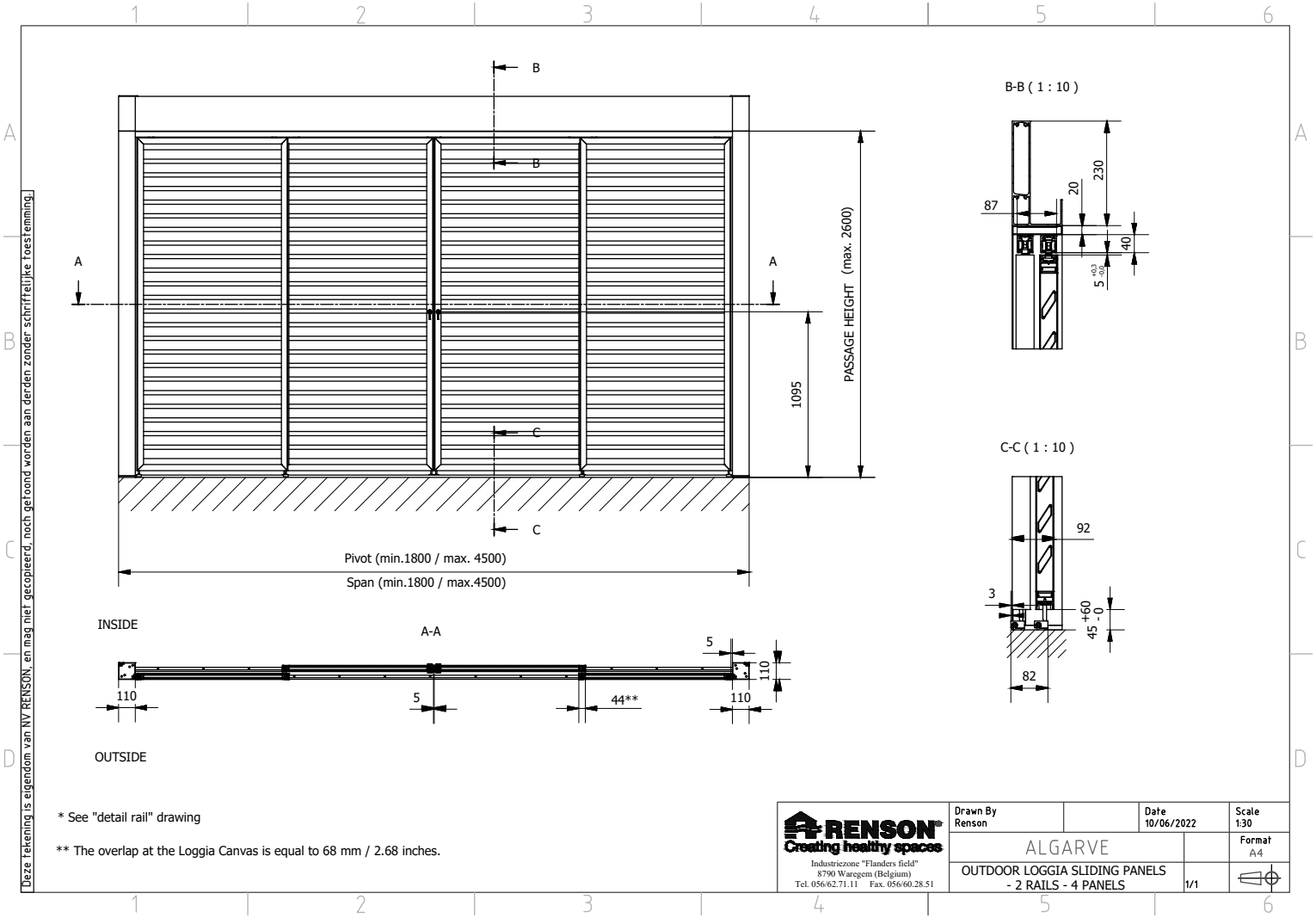

Download this drawing DWG

Download this drawing PDF

RENSON®
Creating healthy spaces

Algarve - GLASS SLIDING PANELS - 3 TRACKS

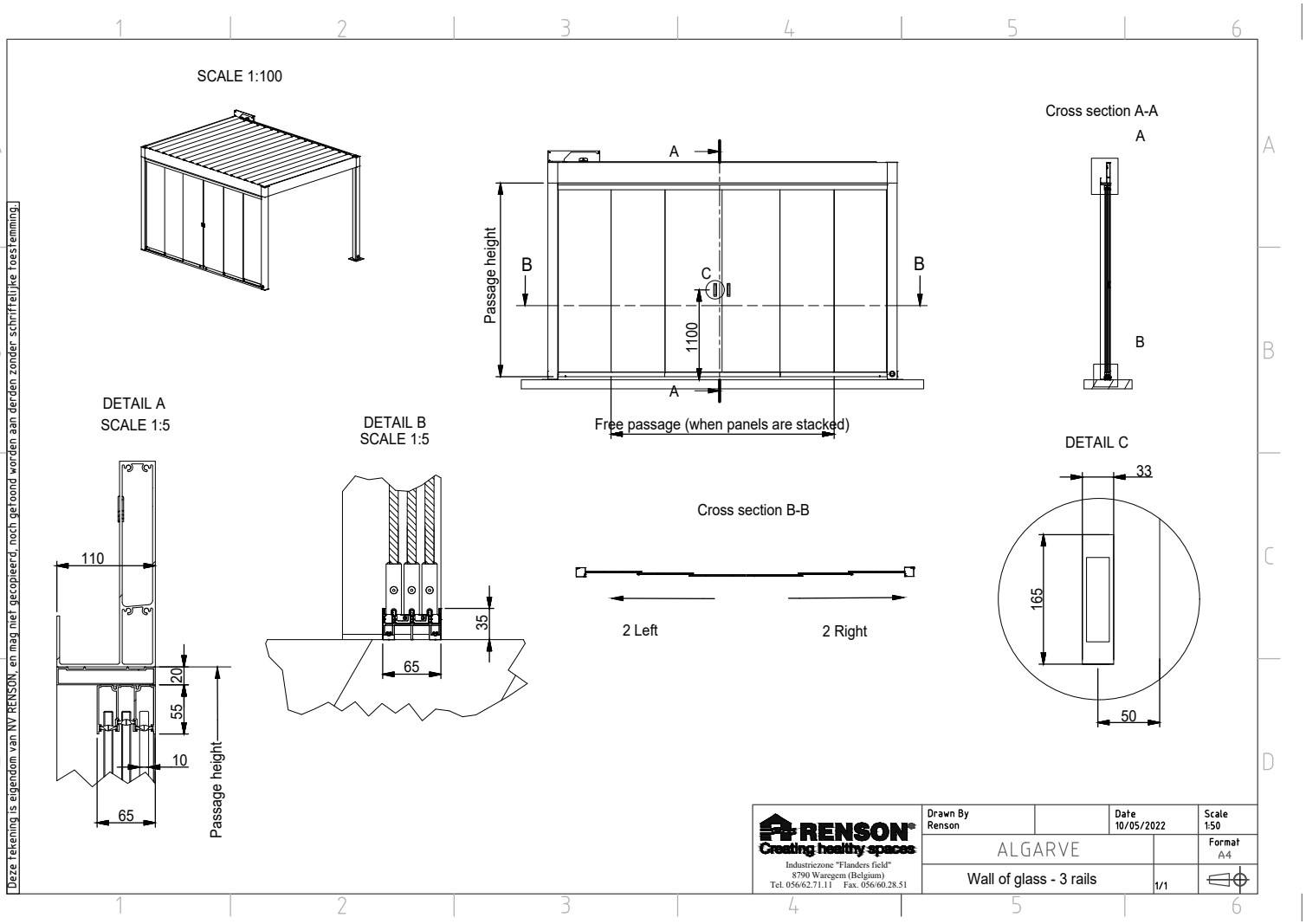

Download this drawing DWG

Download this drawing PDF

RENSON®
Creating healthy spaces

Algarve - GLASS SLIDING PANELS - 4 TRACKS

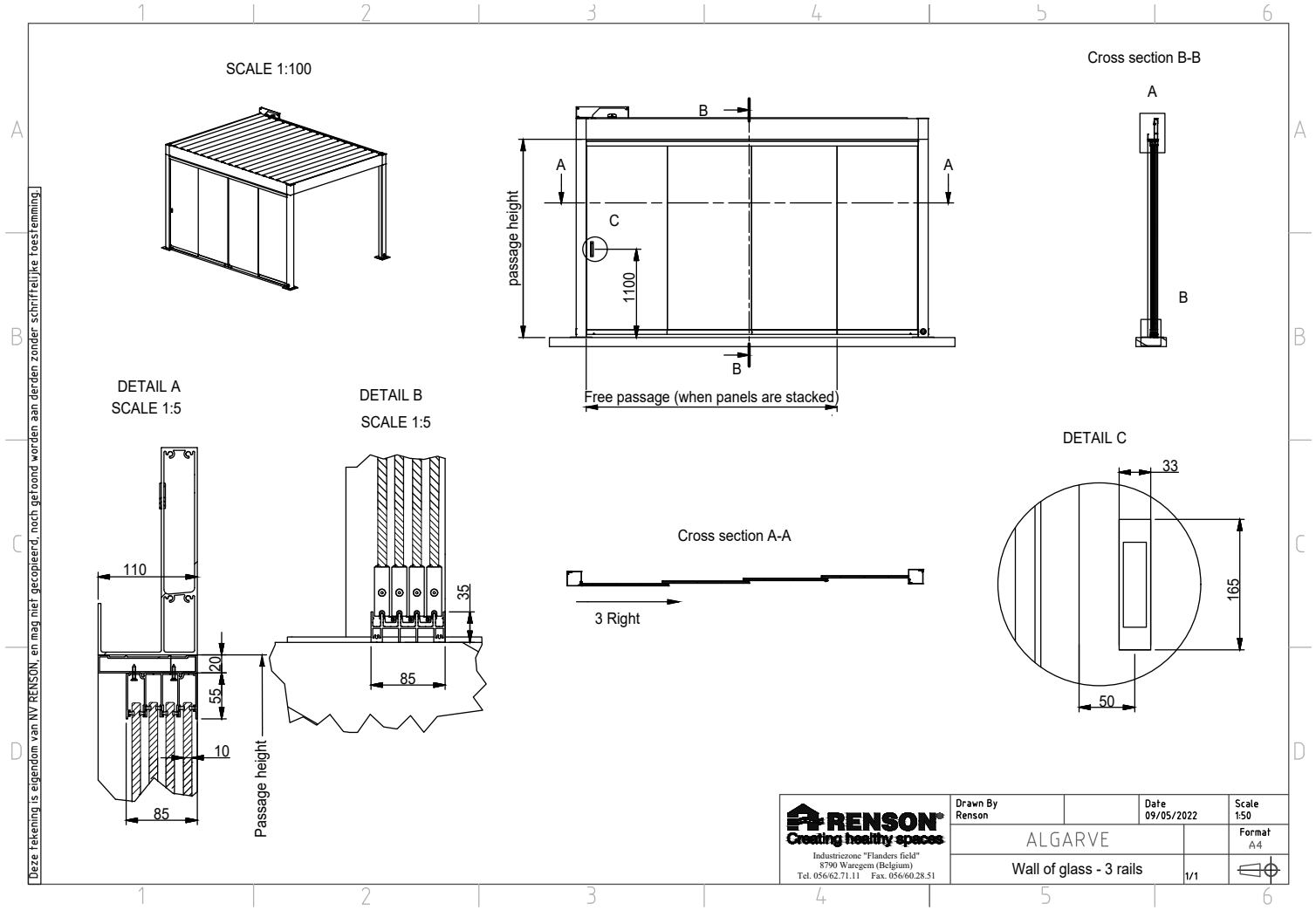

Download this drawing DWG

Download this drawing PDF

RENSON®
Creating healthy spaces

Algarve - GLASS SLIDING PANELS - 5 TRACKS

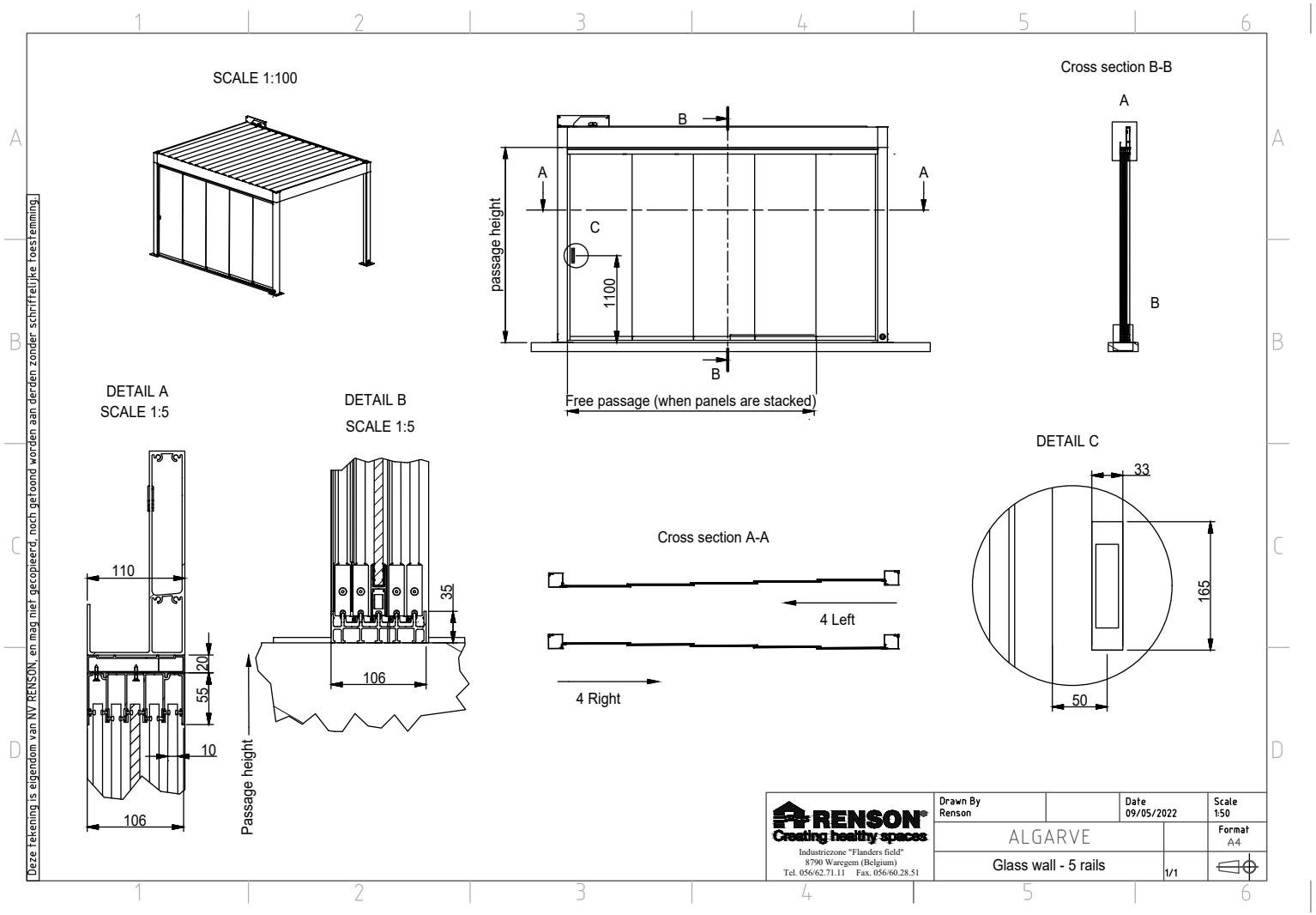

Download this drawing DWG

Download this drawing PDF

RENSON®
Creating healthy spaces

Algarve - GLASS SLIDING PANELS - FIXATION AT WALL

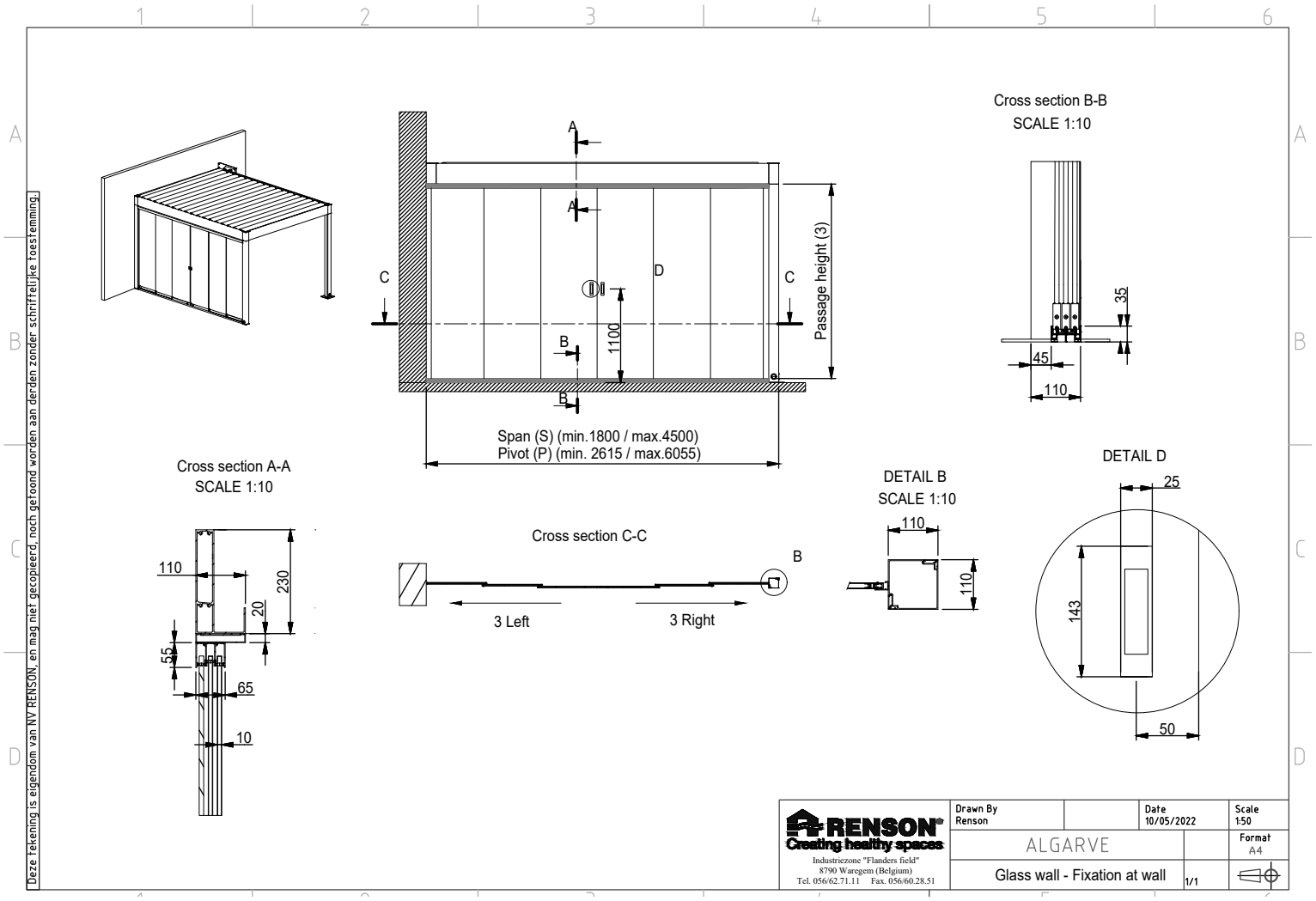

Download this drawing DWG

Download this drawing PDF

RENSON®
Creating healthy spaces

Algarve - GLASS SLIDING PANELS - 3 TRACKS WITH INCLINATION RAIL

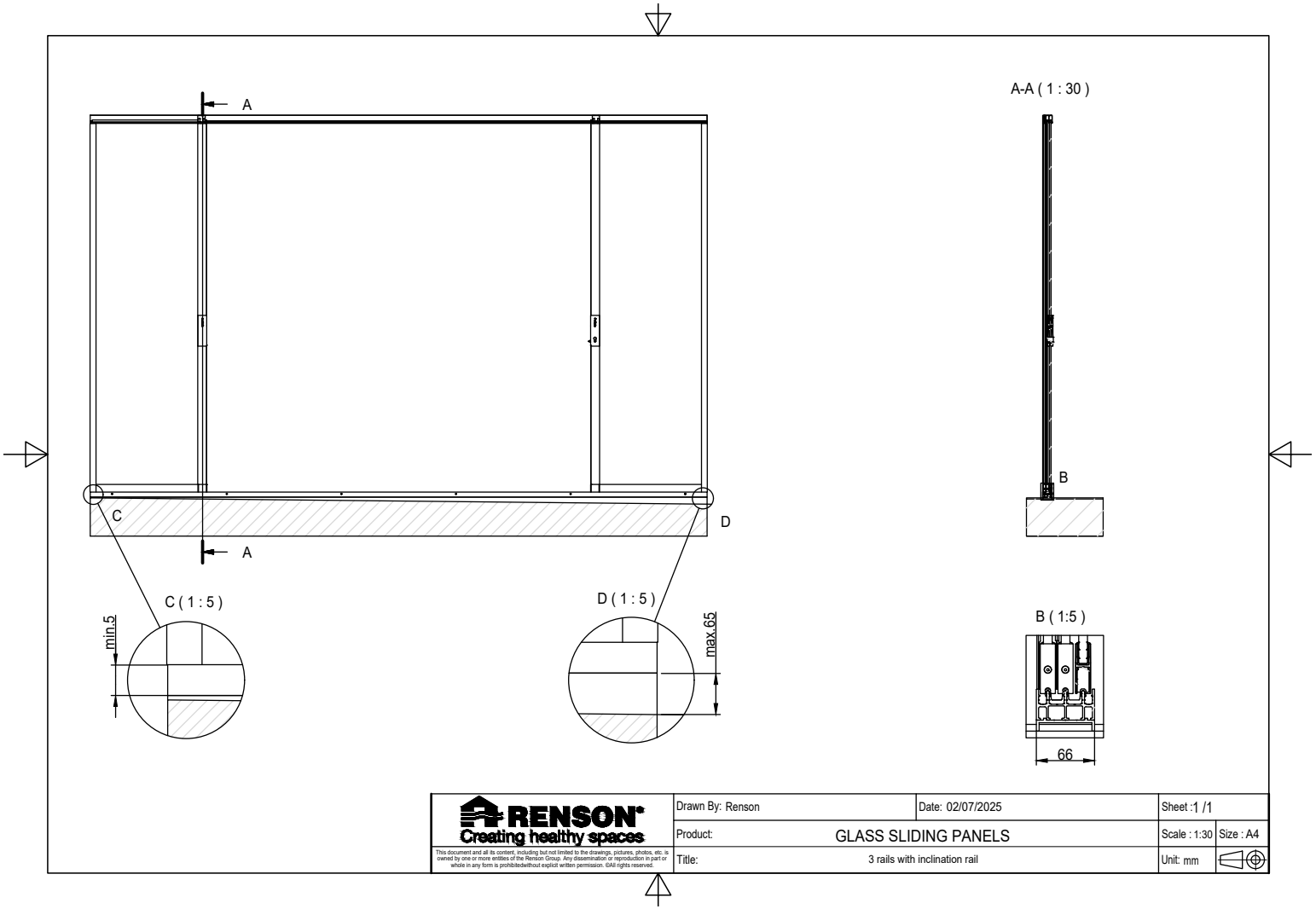

Download this drawing DWG

Download this drawing PDF

RENSON®
Creating healthy spaces

Algarve - GLASS SLIDING PANELS - INCLINATION RAILS

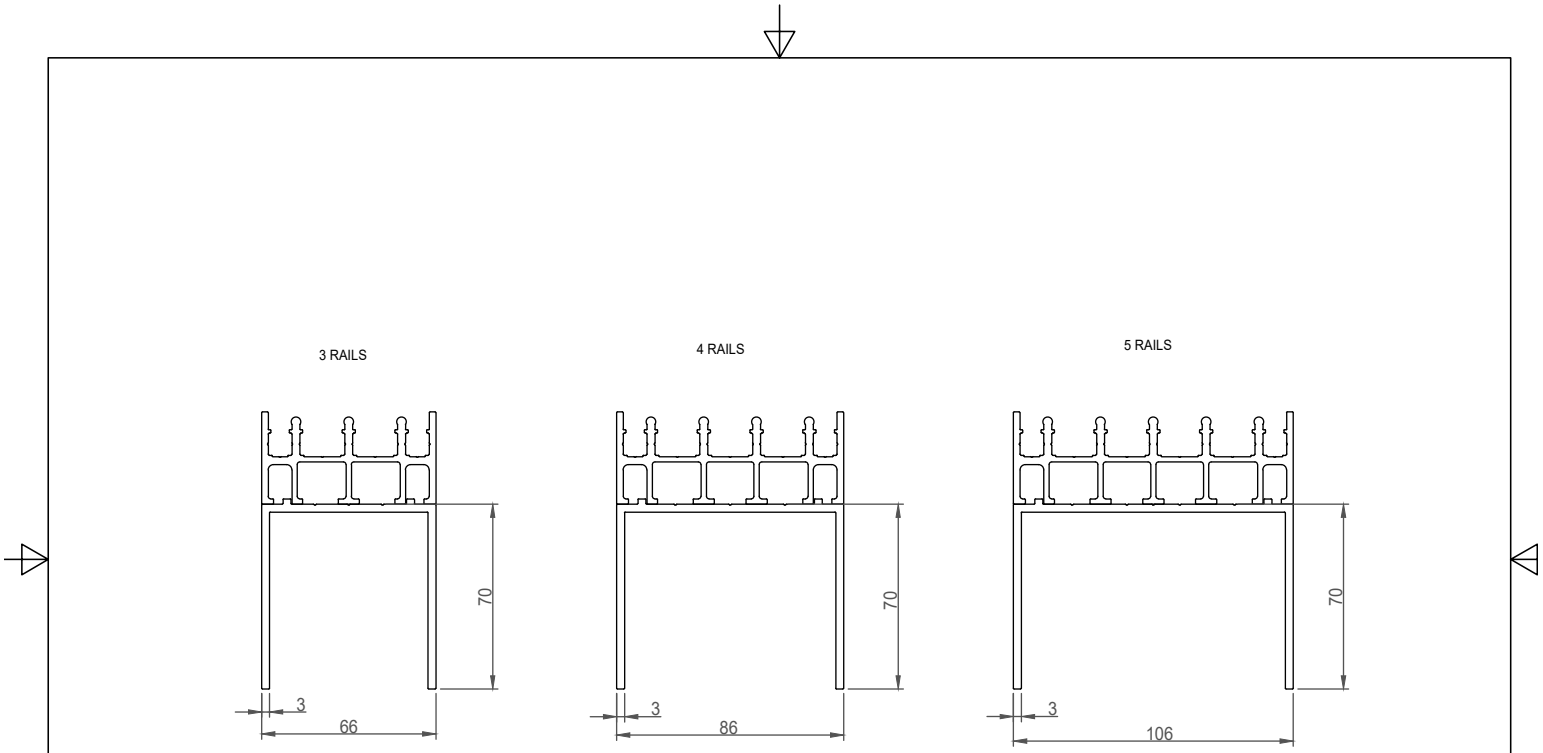

RENSON® Creating healthy spaces	Drawn By: Renson	Date: 03/07/2025	Sheet :1 /1
	Product: GLASS SLIDING PANELS		Scale : 1:2 / Size : A4
	Title: Inclination rails		Unit: mm

This document and all its content, including but not limited to the drawings, pictures, photos, etc. is owned by one or more entities of the Renson Group. Any dissemination or reproduction in part or whole in any form is prohibitedwithout explicit written permission. ©All rights reserved.

Download this drawing DWG

Download this drawing PDF

RENSON® Creating healthy spaces

Algarve - GLASS SLIDING PANELS - DOUBLE-SIDED HANDLE

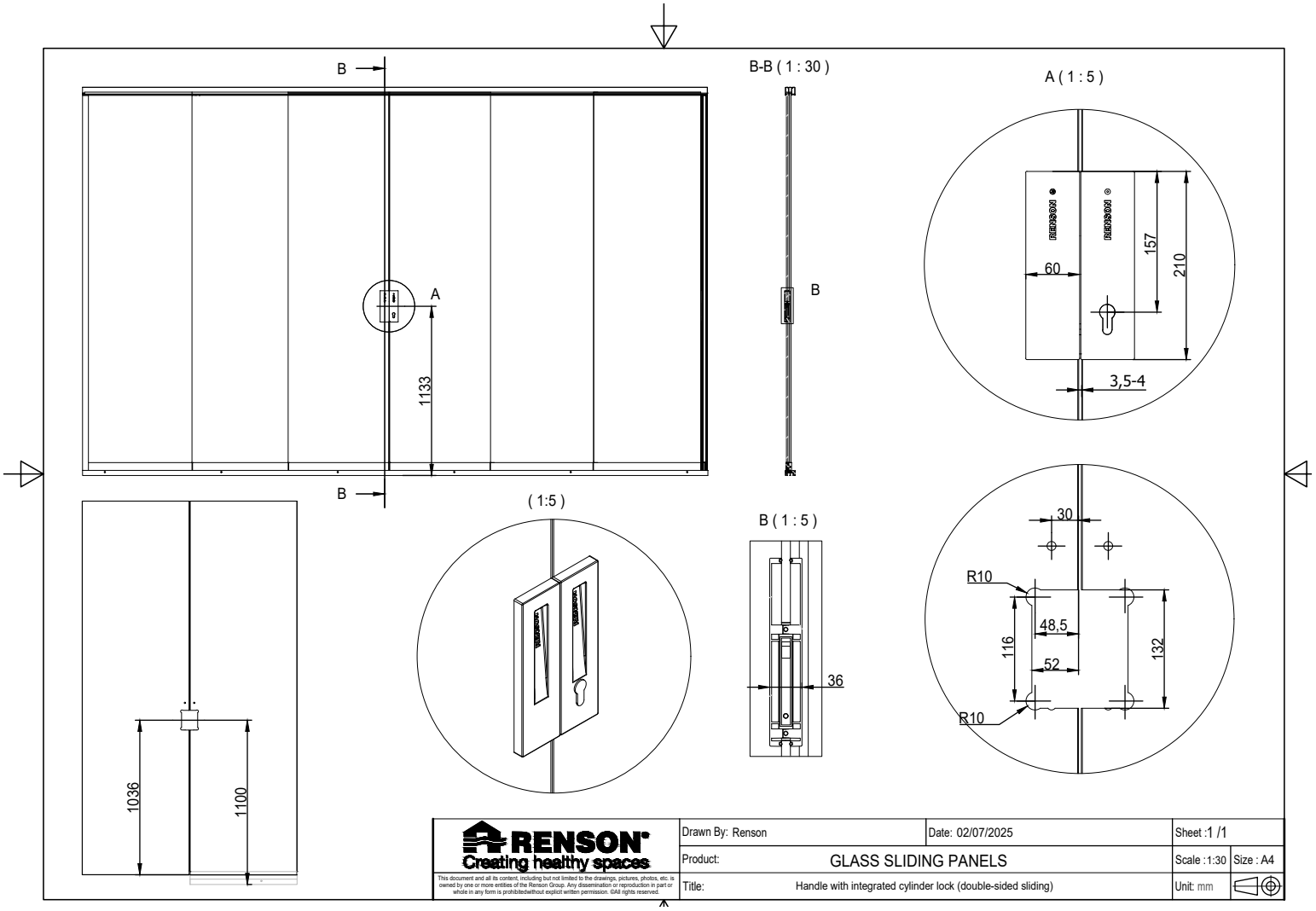

Download this drawing DWG

Download this drawing PDF

RENSON®
Creating healthy spaces

Algarve - GLASS SLIDING PANELS - SINGLE-SIDED HANDLE

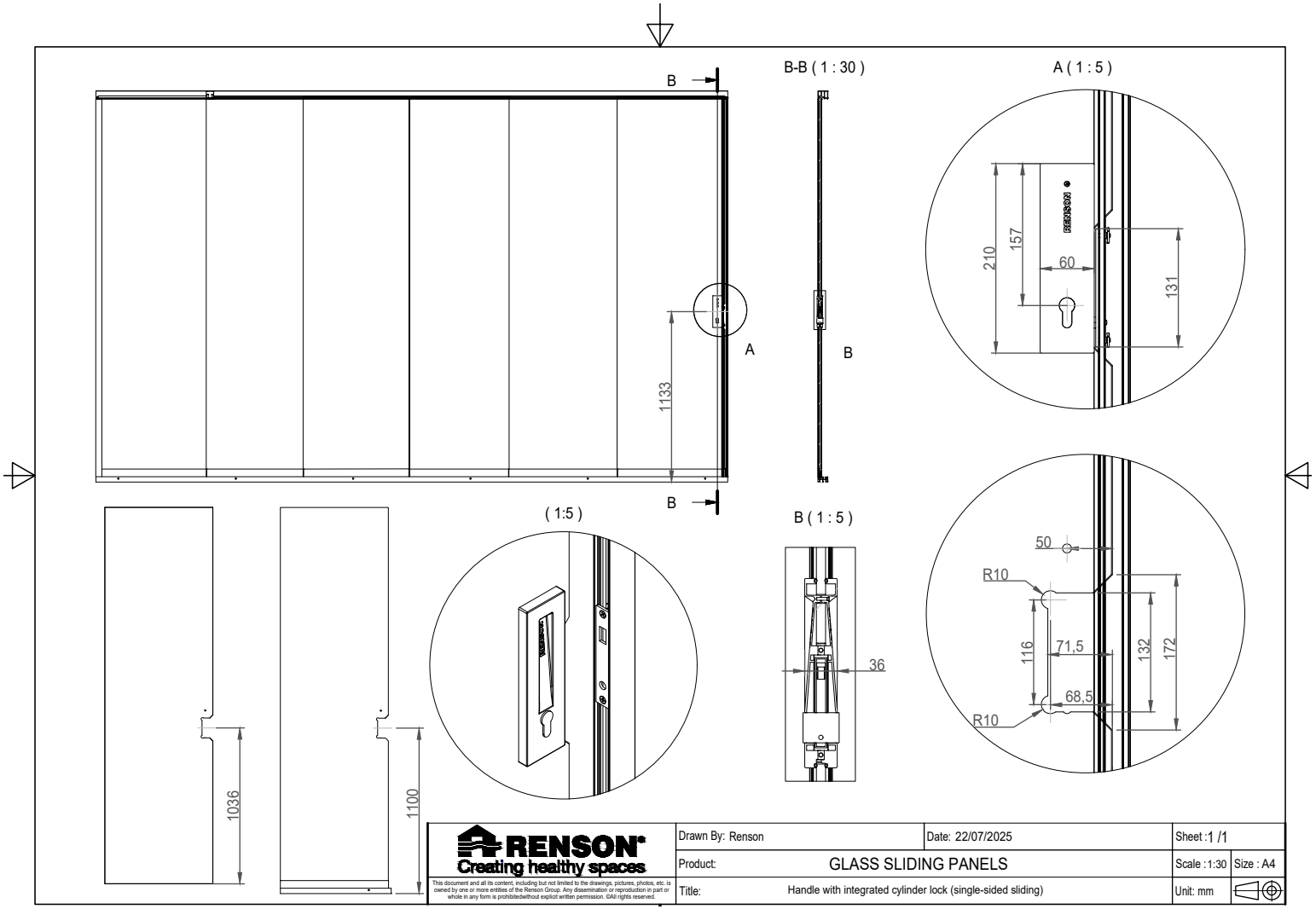

Download this drawing DWG

Download this drawing PDF

RENSON®
Creating healthy spaces

Algarve - LINIUS WALL - SINGLE SIDED

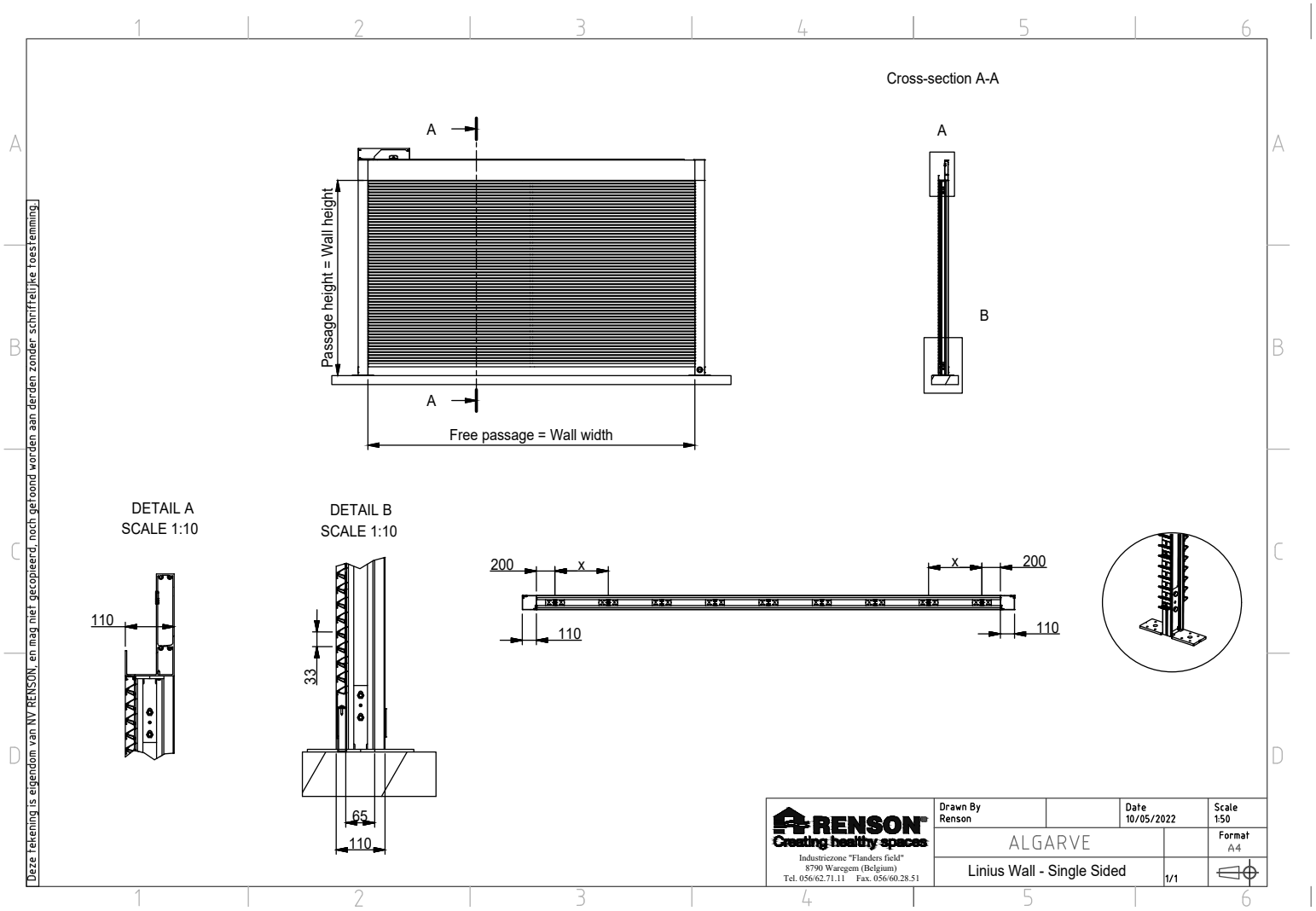

Download this drawing DWG

Download this drawing PDF

RENSON®
Creating healthy spaces

Algarve - LINIUS WALL - DOUBLE SIDED

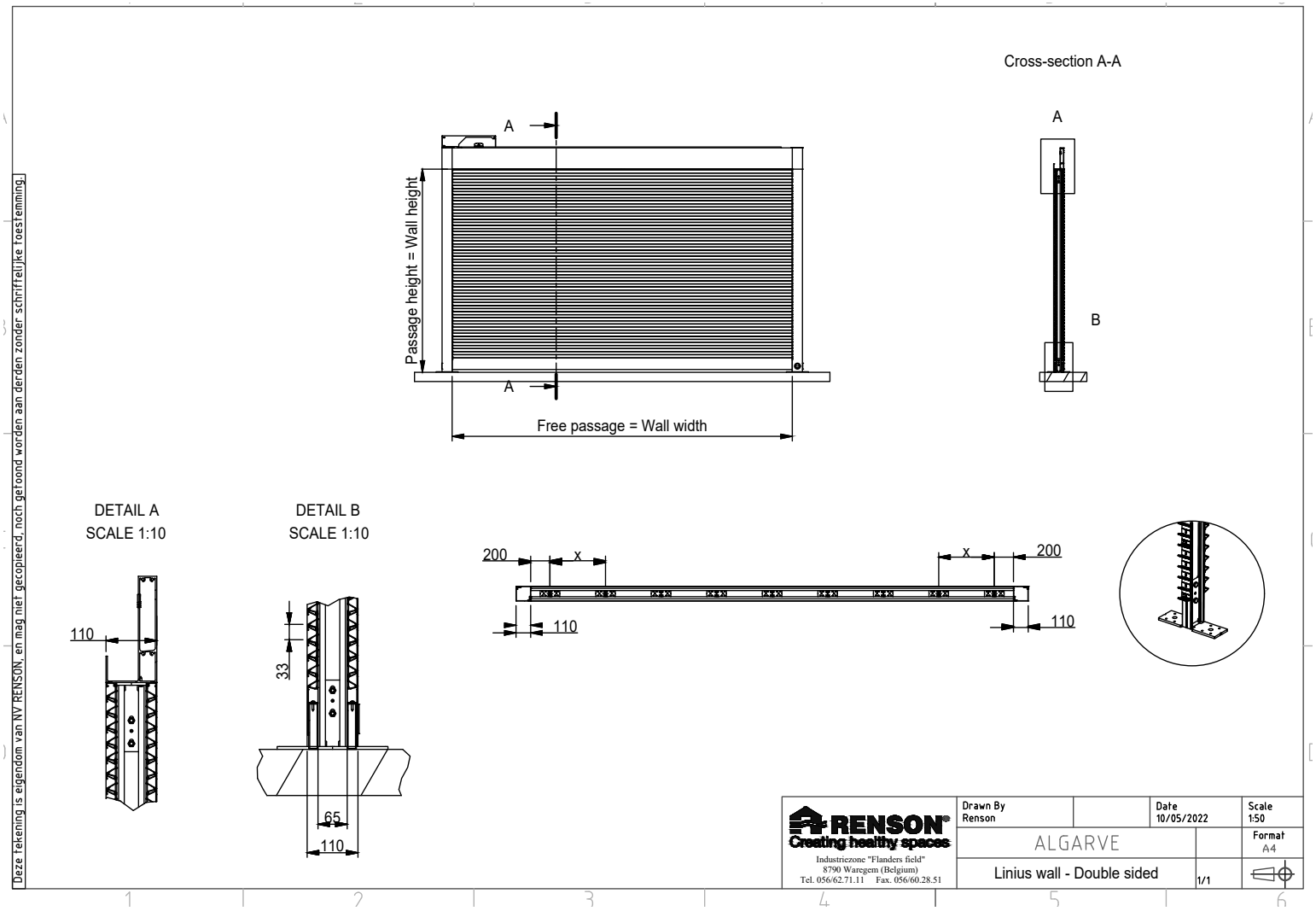

Download this drawing DWG

Download this drawing PDF

RENSON®
Creating healthy spaces

Algarve - LINIUS WALL - DOUBLE SIDED AS RAILING

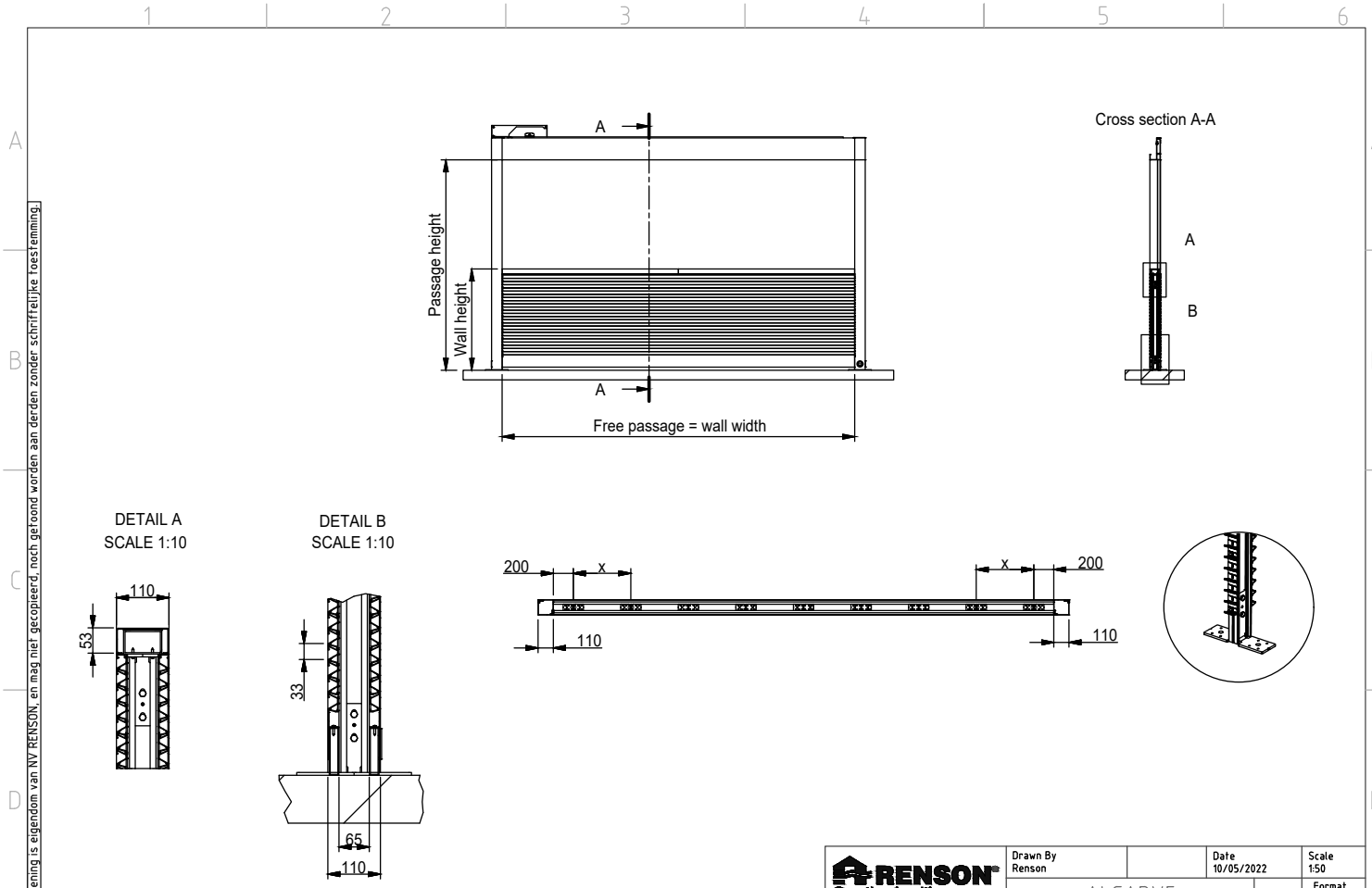

Download this drawing DWG

Download this drawing PDF

RENSON®
Creating healthy spaces

Algarve - CURTAIN

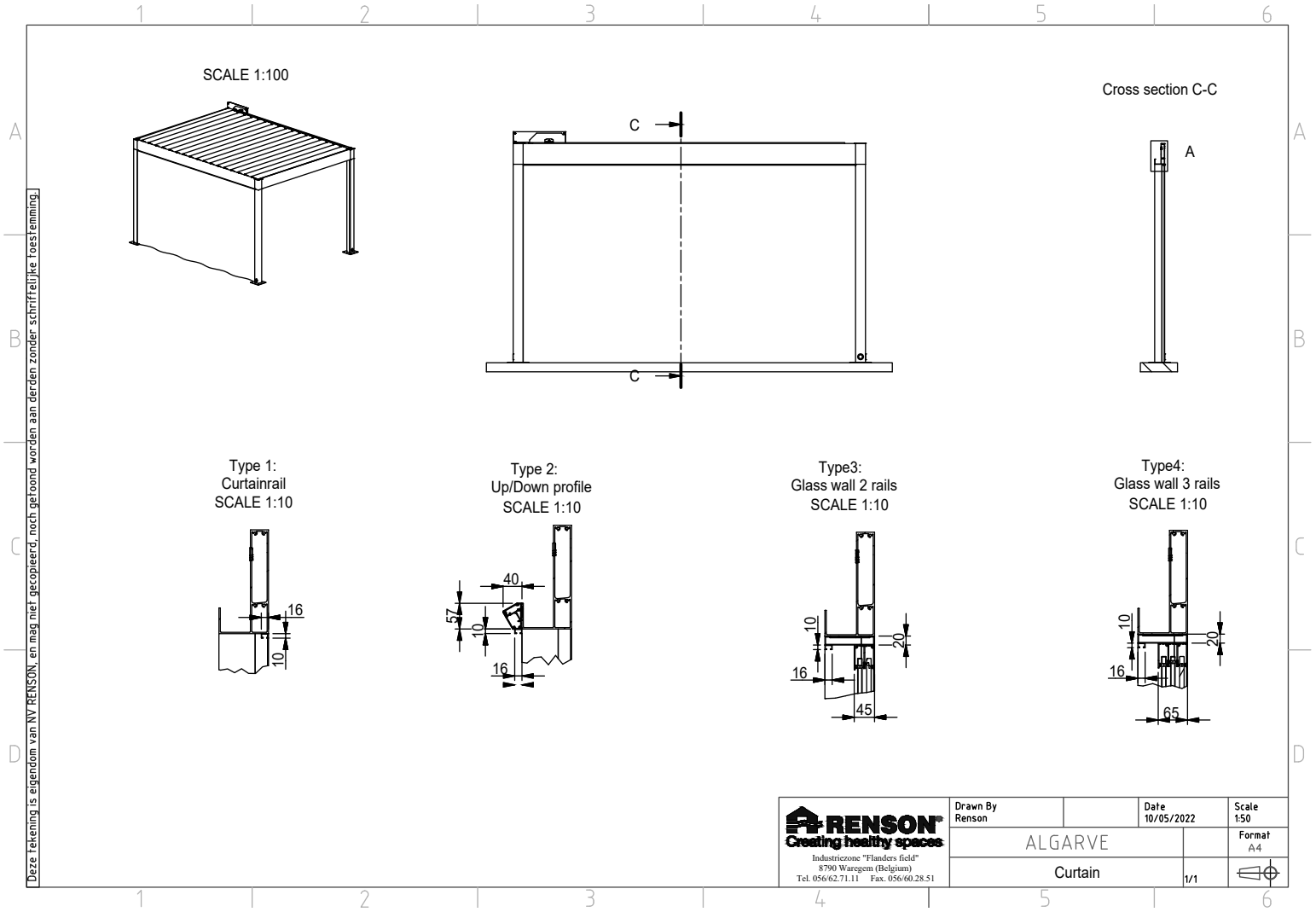

Download this drawing DWG

Download this drawing PDF

RENSON®
Creating healthy spaces