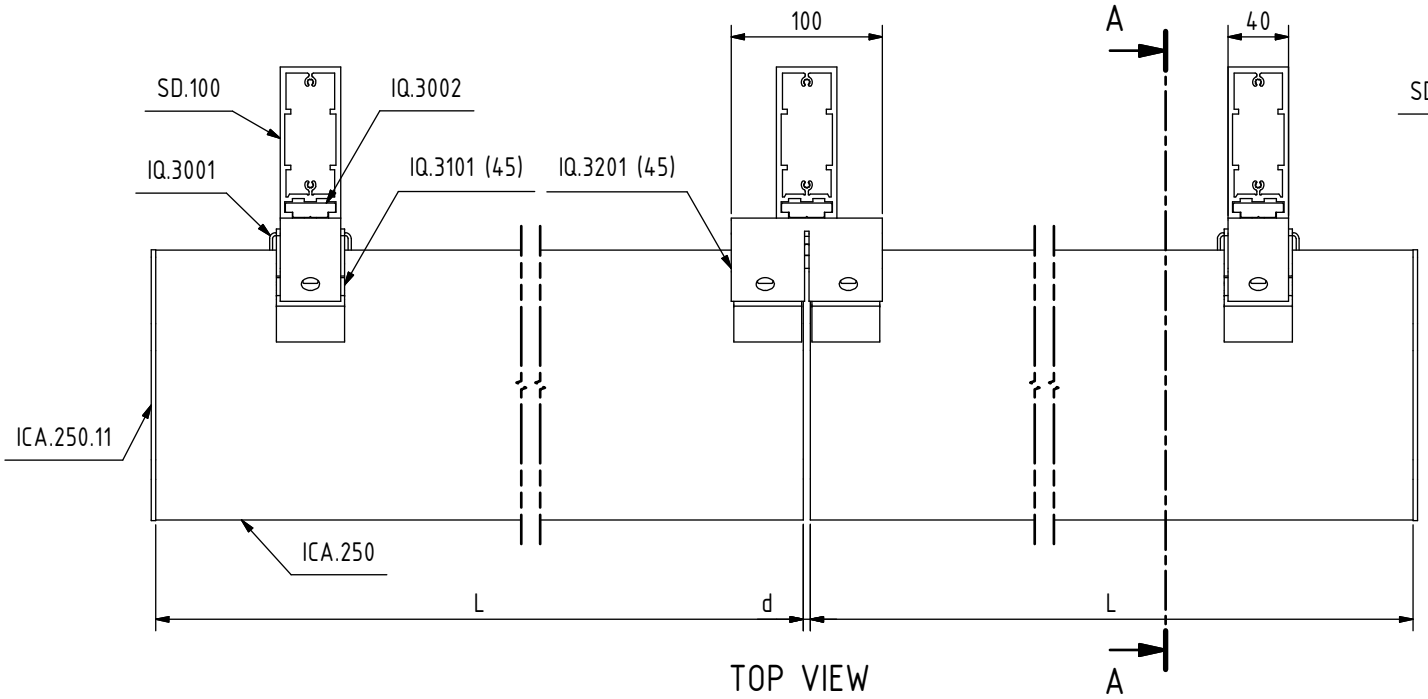

TOP VIEW

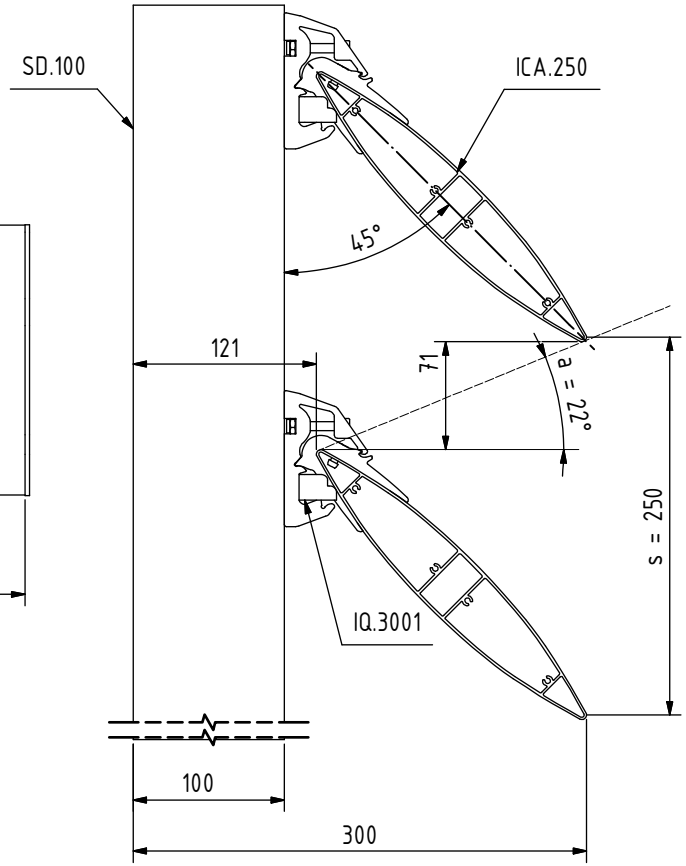

A-A

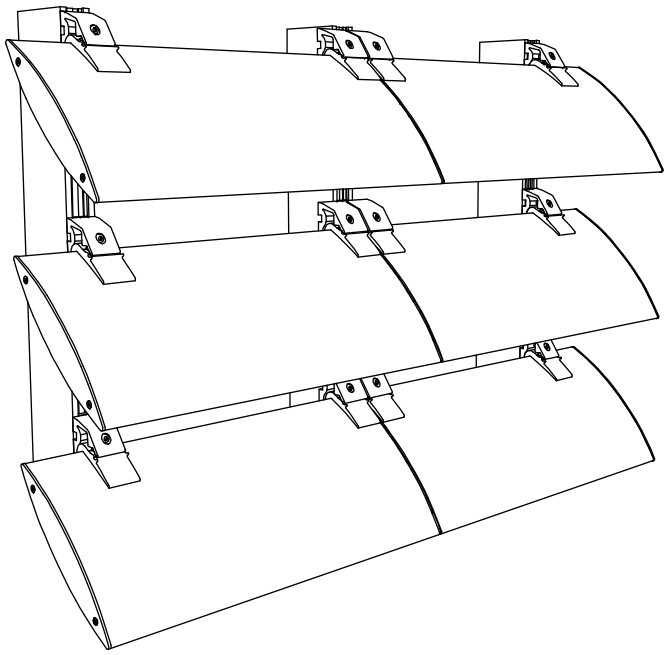

Maximal dimensions to be discussed with R&D Dept. of NV Renson Projects.

KEY REFERENCE

L: Length of blade [mm]
d: Expansion joint [mm]
= 0,001 x L
s: Step of blade [mm]
a: Min. sun entrance angle [°]

RENSON® Creating healthy spaces
RENSON FABRICATIONS Ltd
Fairfax Units 1-2-3
Bircholt Rd. - Parkwood I.E.
Maidstone, Kent, ME15 9SF
Tel.: 01622 754123
Fax: 01622 689478
www.renson.eu

VERTICAL FIXED

TYPE: ICARUS SUBTYPE: QUICKFIX

DESCRIPTION: ICA.250 (45°) + SD.100

PRODUCT SHEET	SHEET N°	ISSUE	Scale: 1/5
	VV-I-1.0409	V.01	Orig. format: A4

R:\CAD\91. Product Fiches\INV\VV\I\VV_I_1_0409-RF.idw

All rights reserved to NV RENSON PROJECTS. This drawing shall not be copied nor showed to third parties without written permission of NV RENSON PROJECTS.